REF34xx Low-Drift, Low-Power, Small-Footprint Series Voltage Reference

1 Features

- Initial accuracy: ±0.05% (maximum)
- Temperature coefficient: 6ppm/°C (maximum)
- Operating temperature range: −40°C to +125°C
- Output current: ±10mA
- Low quiescent current: 95µA (maximum)
- Ultra-low zero load dropout voltage: 100mV (maximum)
- Wide input voltage: 12V
- Output 1/f noise (0.1Hz to 10Hz): 3.8µV_{p-p}/V
- Excellent long-term stability 25ppm/1000hrs
- Multiple small footprint 6-pin SOT-23 package pinouts: REF34xx and REF34xxT

2 Applications

- Data acquisition systems
- Analog I/O modules
- Field transmitters
- Lab & field instrumentation
- Servo drive control modules
- DC power supply, AC source, electronic load

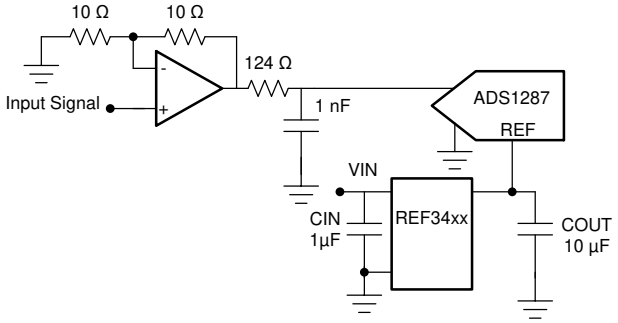

Copyright © 2017, Texas Instruments Incorporated

Simplified Schematic

3 Description

The REF34xx device is a low temperature drift (6ppm/°C), low-power, high-precision CMOS voltage reference, featuring ±0.05% initial accuracy, low operating current with power consumption less than 95µA. This device also offers very low output noise of 3.8µV_{p-p} /V, which enables its ability to maintain high signal integrity with high-resolution data converters in noise critical systems. With a small SOT-23 package, REF34xx offers enhanced specifications and pin-to-pin replacement for MAX607x, ADR34xx and LT1790 (REF34xxT, no EN pin). The REF34xx family is compatible to most of the ADC and DAC such as ADS1287, DAC8802 and ADS1112.

Stability and system reliability are further improved by the low output-voltage hysteresis of the device and low long-term output voltage drift. Furthermore, the small size and low operating current of the devices (95µA) benefit portable and battery-powered applications.

REF34xx is specified for the wide temperature range of −40°C to +125°C.

Package Information

PART NAME	PACKAGE (1)	PACKAGE SIZE(2)
REF34xx	DBV (SOT-23, 6)	2.90mm × 1.60mm
REF34xxT		

(1) For more information, see Section 12.
(2) The package size (length × width) is a nominal value and includes pins, where applicable.

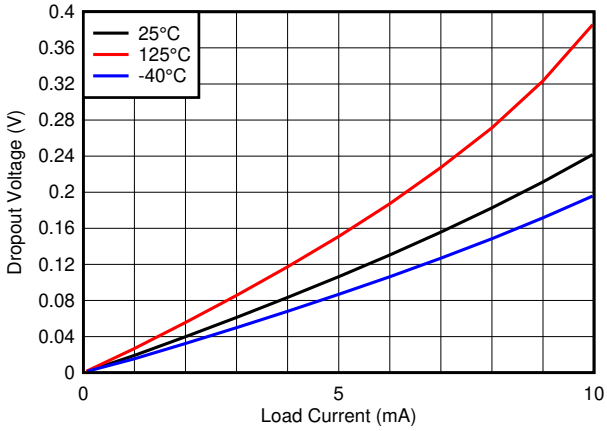

Dropout vs Current Load Over Temperature

An IMPORTANT NOTICE at the end of this data sheet addresses availability, warranty, changes, use in safety-critical applications, intellectual property matters and other important disclaimers. PRODUCTION DATA.

Table of Contents

1 Features....1
2 Applications....1
3 Description....1
4 Device Comparison....3
5 Pin Configuration and Functions....4
6 Specifications....5
6.1 Absolute Maximum Ratings....5
6.2 ESD Ratings....5
6.3 Recommended Operating Conditions....5
6.4 Thermal Information....5
6.5 Electrical Characteristics....6
6.6 Typical Characteristics....8
7 Parameter Measurement Information....12
7.1 Solder Heat Shift....12
7.2 Long-Term Stability....13
7.3 Thermal Hysteresis....13
7.4 Power Dissipation....14
7.5 Noise Performance....15
8 Detailed Description....16
8.1 Overview....16
8.2 Functional Block Diagram....16
8.3 Feature Description....16
8.4 Device Functional Modes....17
9 Application and Implementation....18
9.1 Application Information....18
9.2 Typical Application: Basic Voltage Reference Connection....18
9.3 Power Supply Recommendations....20
9.4 Layout....20
10 Device and Documentation Support....22
10.1 Documentation Support....22
10.2 Receiving Notification of Documentation Updates....22
10.3 Support Resources....22
10.4 Trademarks....22
10.5 Electrostatic Discharge Caution....22
10.6 Glossary....22
11 Revision History....22
12 Mechanical, Packaging, and Orderable Information....23

Copyright © 2026 Texas Instruments Incorporated

4 Device Comparison

PRODUCT		V_{OUT}
REF3425	REF3425T	2.5V
REF3430	REF3430T	3V
REF3433	REF3433T	3.3V
REF3440	REF3440T	4.096V
REF3450	REF3450T	5V

Voltage Reference Recommendation for Data Converters

VOLTAGE REFERENCE	ADC RESOLUTION(1)	DAC RESOLUTION(1)
TL431LI, TLV431	10-b	8-b
LM4040, LM4050, REF30	12-b	10-b
REF31, REF33, REF4132	14-b to 16-b	12-b
REF34, REF50	16-b to 18-b	14-b to 16-b
REF70	18-b+	16-b+

(1) For specific ADC/DAC recommendations, see the *Voltage Reference Selection and Design Tips For Data Converters* application note

5 Pin Configuration and Functions

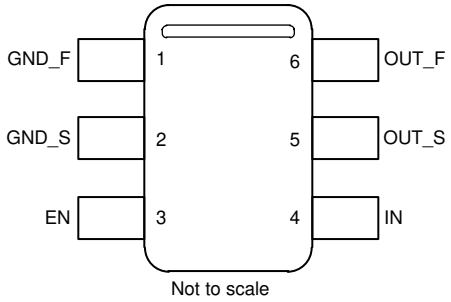

Figure 5-1. REF34xx DBV Package 6-Pin SOT-23 Top View

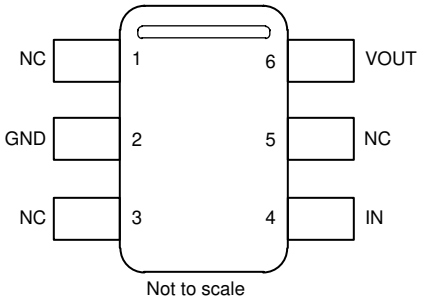

Figure 5-2. REF34xxT DBV Package 6-Pin SOT-23 Top View

Table 5-1. Pin Functions

PIN			TYPE	DESCRIPTION
NAME	REF34xx (DBV)	REF34xxT (DBV)		
GND_F	1		Ground	Ground force connection.
GND_S	2		Ground	Ground sense connection.
GND		2	Ground	Device ground.
EN	3		Input	Enable connection. Enables or disables the device.
IN	4	4	Power	Input supply voltage connection.
OUT_S	5		Input	Reference voltage output sense connection.
OUT_F	6		Output	Reference voltage output force connection.
VOUT		6	Output	Reference voltage output connection.
NC		1,3,5	-	Not connected. Pin can be left floating or connected to voltage within device operating range.

Copyright © 2026 Texas Instruments Incorporated

6 Specifications

6.1 Absolute Maximum Ratings

over operating free-air temperature range (unless otherwise noted)[1]

		MIN	MAX	UNIT
Input voltage	IN	–0.3	13	V
	EN	–0.3	IN + 0.3	V
Output voltage	V_{OUT}	–0.3	5.5	V
Output short circuit current	I_{SC}		20	mA
Operating temperature range	T_A	–55	150	°C
Storage temperature range	T_{stg}	–65	170	°C

(1) Operation outside the *Absolute Maximum Ratings* may cause permanent device damage. *Absolute Maximum Ratings* do not imply functional operation of the device at these or any other conditions beyond those listed under *Recommended Operating Conditions*. If used outside the *Recommended Operating Conditions* but within the *Absolute Maximum Ratings*, the device may not be fully functional, and this may affect device reliability, functionality, performance, and shorten the device lifetime.

6.2 ESD Ratings

			VALUE	UNIT
$V_{(ESD)}$	Electrostatic discharge	Human-body model (HBM), per ANSI/ESDA/JEDEC JS-001[1]	±2500	V
		Charged-device model (CDM), per JEDEC specification JESD22-C101[2]	±1500	

(1) JEDEC document JEP155 states that 500V HBM allows safe manufacturing with a standard ESD control process.
(2) JEDEC document JEP157 states that 250V CDM allows safe manufacturing with a standard ESD control process.

6.3 Recommended Operating Conditions

over operating free-air temperature range (unless otherwise noted)

		MIN	NOM	MAX	UNIT
IN	Input Voltage	V_{OUT} + V_{DO} [1]		12	V
EN	Enable Voltage	0		IN	V
I_L	Output Current	–10		10	mA
T_A	Operating Temperature	–40	25	125	°C

(1) V_{DO} = Dropout voltage

6.4 Thermal Information

THERMAL METRIC[1]		REF34T DBV 6 PINS	REF34 DBV 6 PINS	UNIT
$R_{\theta JA}$	Junction-to-ambient thermal resistance	122.6	122.6	°C/W
$R_{\theta JC(top)}$	Junction-to-case (top) thermal resistance	80.2	80.2	°C/W
$R_{\theta JB}$	Junction-to-board thermal resistance	42	42	°C/W
Ψ_{JT}	Junction-to-top characterization parameter	23.2	23.2	°C/W
Ψ_{JB}	Junction-to-board characterization parameter	41.9	41.9	°C/W
$R_{\theta JC(bot)}$	Junction-to-case (bottom) thermal resistance	N/A	N/A	°C/W

(1) For more information about traditional and new thermal metrics, see the *Semiconductor and IC Package Thermal Metrics* application note.

6.5 Electrical Characteristics

At $V_{IN} = V_{OUT} + V_{DO}$, $C_{OUT} = 10\mu F$, $C_{IN} = 0.1\mu F$, $I_L = 0mA$, minimum and maximum specifications at $T_A = –40°C$ to 125°C; Typical specifications at $T_A = 25°C$ unless otherwise noted

PARAMETER		TEST CONDITION		MIN	TYP	MAX	UNIT
ACCURACY AND DRIFT							
	Output voltage accuracy	$T_A = 25°C$		–0.05		0.05	%
	Output voltage temperature coefficient (1)	$–40°C \le T_A \le 125°C$			2.5	6	ppm/°C
LINE AND LOAD REGULATION							
$\Delta V_O/\Delta V_{IN}$	Line Regulation	$V_{IN} = V_{OUT} + V_{DO}$ (2) to 12V			2	15	ppm/V
$\Delta V_O/\Delta I_L$	Load Regulation	I_L = 0mA to 10mA, $V_{IN} = V_{OUT} + V_{DO}$ (3)	Sourcing		20	30	ppm/mA
		I_L = 0mA to –10mA, $V_{IN} = V_{OUT} + V_{DO}$, T_A = 25°C (3)	Sinking, REF3425		40	70	
			Sinking, REF3430		43	75	
			Sinking, REF3433		48	84	
			Sinking, REF3440		60	98	
			Sinking, REF3450		70	140	
I_{SC}	Short circuit current	V_{OUT} = 0V at T_A = 25°C			18	22	mA
NOISE							
e_{np-p}	Low frequency noise (4)	0.1Hz ≤ f ≤ 10Hz			5		$\mu V_{p-p}/V$
		0.1Hz ≤ f ≤ 10Hz (REF3440 and REF3450)			3.8		
e_n	Integrated wide band noise	10Hz ≤ f ≤ 10kHz			24		μV_{rms}
e_n	Output voltage noise density	f = 1kHz			0.25		ppm/√Hz
		f = 1kHz (REF3440 and REF3450)			0.2		
LONG TERM STABILITY AND HYSTERESIS							
	Long-term stability (5)	DBV Package	0 to 1000h at 35°C		25		ppm
			1000h to 2000h at 35°C		10		
	Output voltage thermal hysteresis (6)	DBV Package	25°C, –40°C,125°C, 25°C Cycle 1		30		ppm
			25°C, –40°C,125°C, 25°C Cycle 2		10		
TURN-ON TIME							
t_{ON}	Turn-on time	0.1% of output voltage settling, $C_L = 10\mu F$			2.5		ms
CAPACITIVE LOAD							
C_L	Stable output capacitor range	$–40°C \le T_A \le 125°C$		0.1		10	µF
OUTPUT VOLTAGE							
V_{OUT}	Output voltage	REF3425, REF3425T			2.5		V
		REF3430, REF3430T			3.0		
		REF3433, REF3433T			3.3		
		REF3440, REF3440T			4.096		
		REF3450, REF3450T			5.0		
POWER SUPPLY							
V_{IN}	Input voltage			$V_{OUT} + V_{DO}$		12	V
I_L	Output current capacity	$V_{IN} = V_{OUT} + V_{DO}$ to 12V		–10		10	mA

Copyright © 2026 Texas Instruments Incorporated

6.5 Electrical Characteristics (continued)

At $V_{IN} = V_{OUT} + V_{DO}$, C_{OUT} = 10µF, C_{IN} = 0.1µF, I_L = 0mA, minimum and maximum specifications at T_A = –40℃ to 125℃; Typical specifications at T_A = 25℃ unless otherwise noted

PARAMETER		TEST CONDITION	MIN	TYP	MAX	UNIT
I_Q	Quiescent current	Active mode		72	95	µA
		Shutdown mode		2.5	3	
V_{EN}	ENABLE pin voltage	Voltage reference in active mode (EN = 1)	1.6			V
		Voltage reference in shutdown mode (EN = 0)			0.5	
V_{DO}	Dropout voltage	I_L = 0mA		50	100	mV
		I_L = 10mA			500	
I_{EN}	ENABLE pin leakage current	$V_{EN} = V_{IN}$ = 12V		1	2	µA

(1) Temperature drift is specified according to the box method. See Section 8.3.2 for more details.
(2) V_{DO} for line regulation test is 50mV.
(3) V_{DO} for load regulation test is 500mV.
(4) The peak-to-peak noise measurement is explained in more detail in Section 7.5.
(5) Long-term stability measurement procedure is explained in more detail in Section 7.2.
(6) Thermal hysteresis measurement procedure is explained in more detail in Section 7.3.

Copyright © 2026 Texas Instruments Incorporated

6.6 Typical Characteristics

at T_A = 25°C, V_{IN} = V_{EN} = 12V, I_L = 0mA, C_L = 10µF, C_{IN} = 0.1µF (unless otherwise noted)

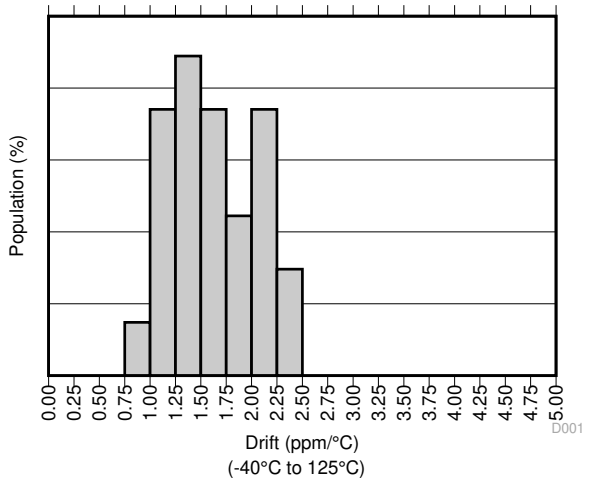

Figure 6-1. Temperature Drift

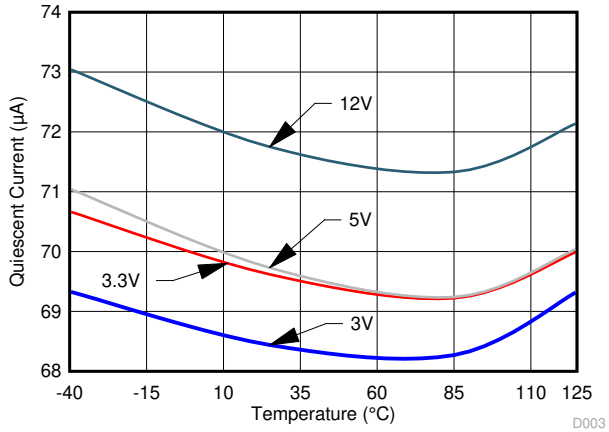

Figure 6-2. V_{IN} vs I_Q Over Temperature

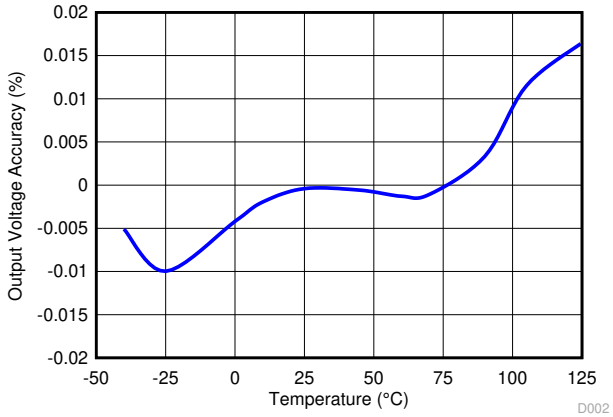

Figure 6-3. Output Voltage Accuracy vs Temperature

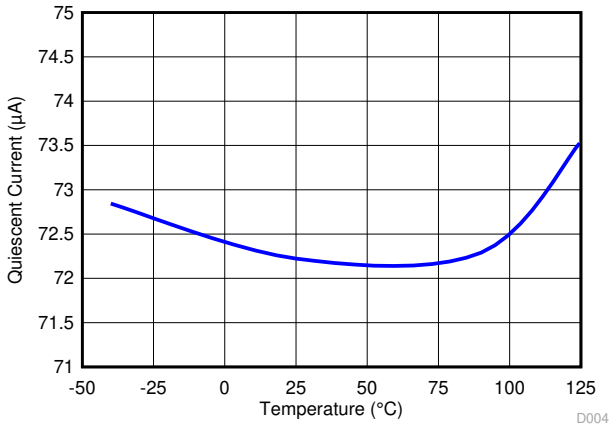

Figure 6-4. Quiescent Current vs Temperature

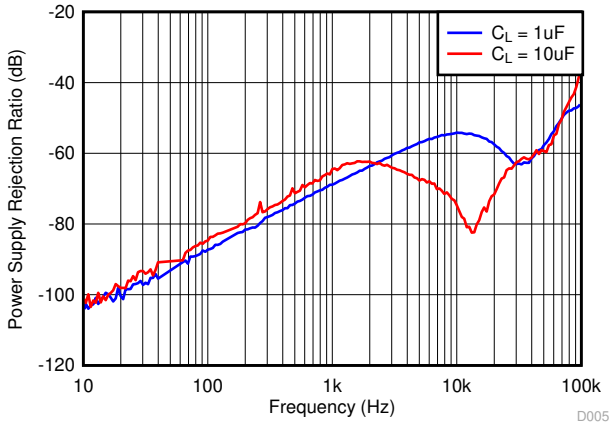

Figure 6-5. Power Supply Rejection Ratio vs Frequency

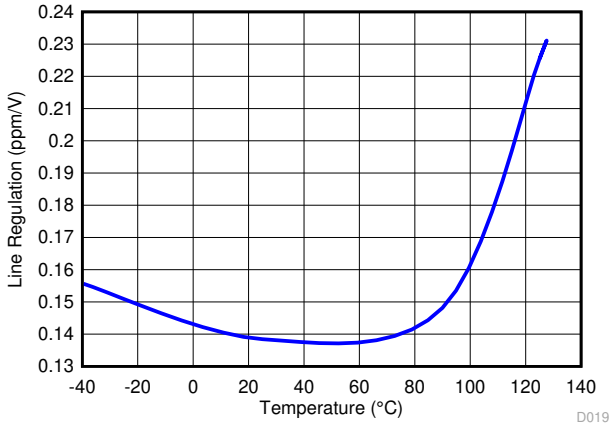

Figure 6-6. Line Regulation

Copyright © 2026 Texas Instruments Incorporated

6.6 Typical Characteristics (continued)

at T_A = 25°C, V_{IN} = V_{EN} = 12V, I_L = 0mA, C_L = 10µF, C_{IN} = 0.1µF (unless otherwise noted)

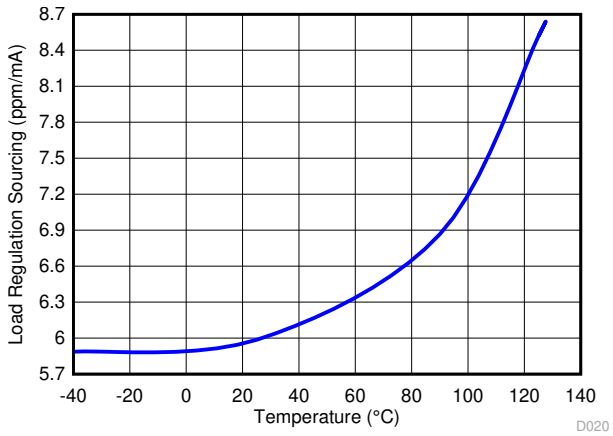

Figure 6-7. Load Regulation Sourcing

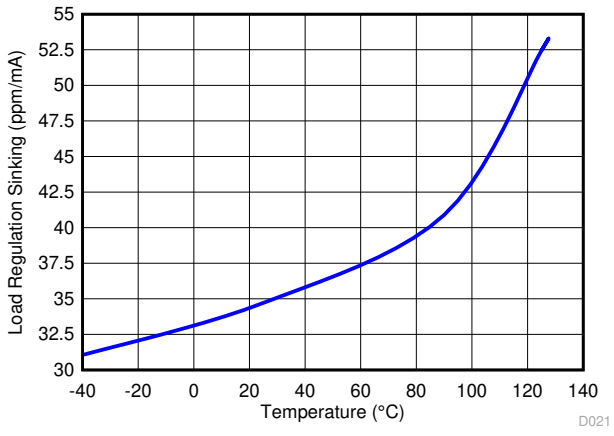

Figure 6-8. Load Regulation Sinking

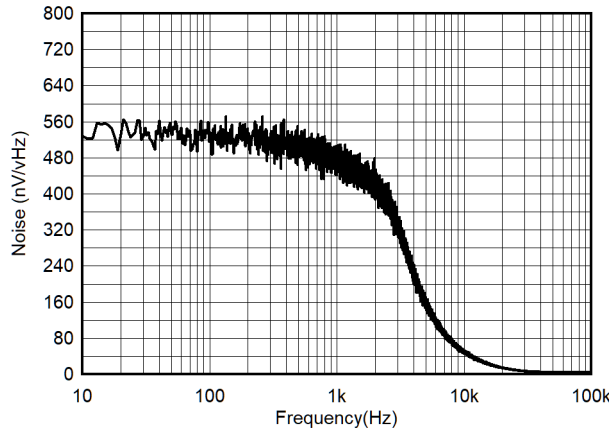

Figure 6-9. Noise Performance 10Hz to 10kHz

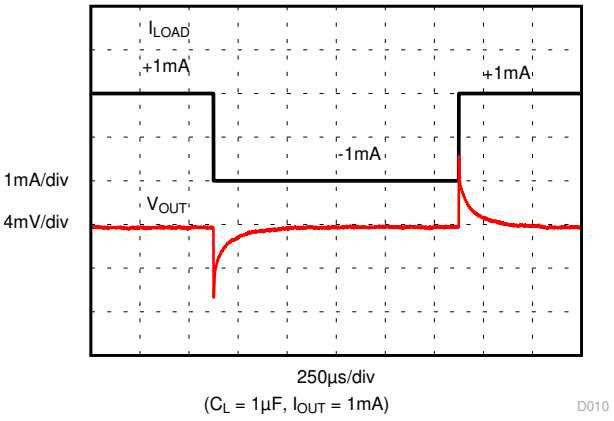

Figure 6-10. Load Transient

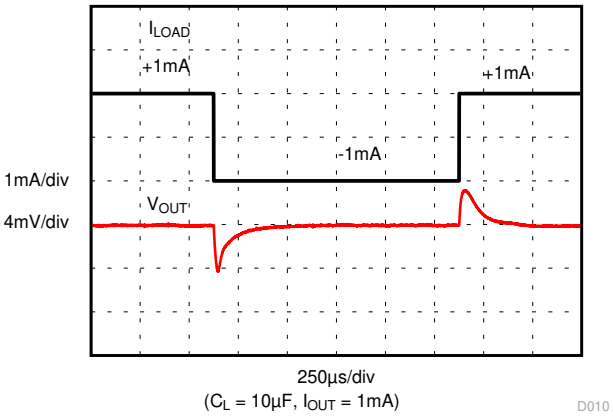

Figure 6-11. Load Transient

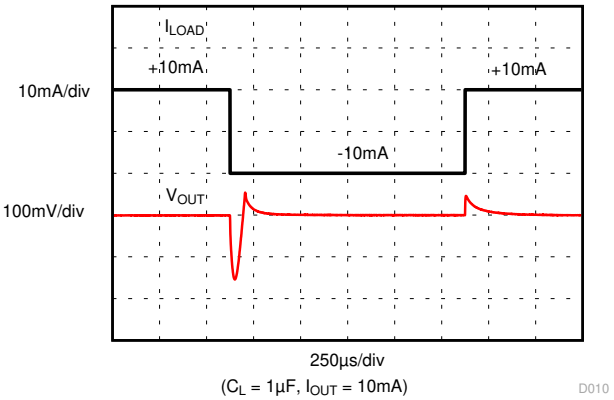

Figure 6-12. Load Transient

6.6 Typical Characteristics (continued)

at T_A = 25°C, V_{IN} = V_{EN} = 12V, I_L = 0mA, C_L = 10µF, C_{IN} = 0.1µF (unless otherwise noted)

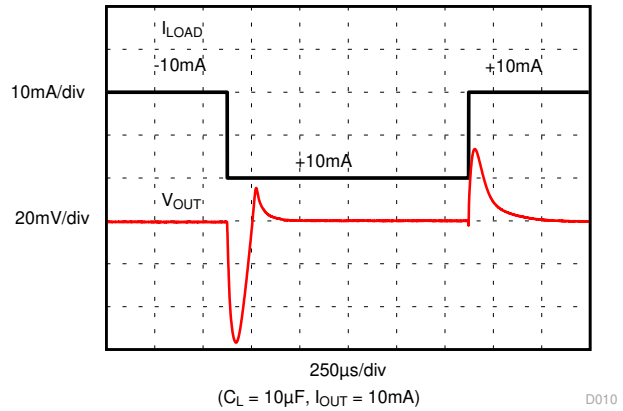

Figure 6-13. Load Transient

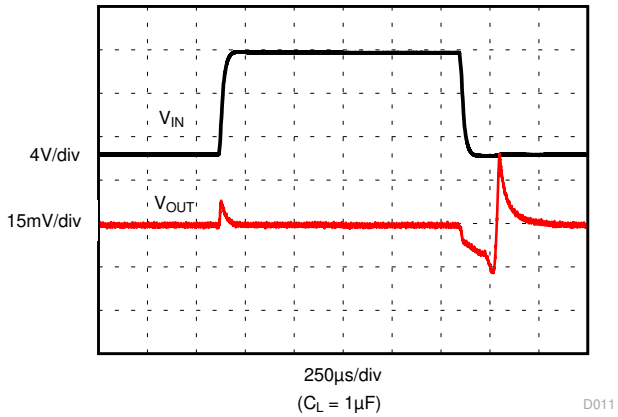

Figure 6-14. Line Transient

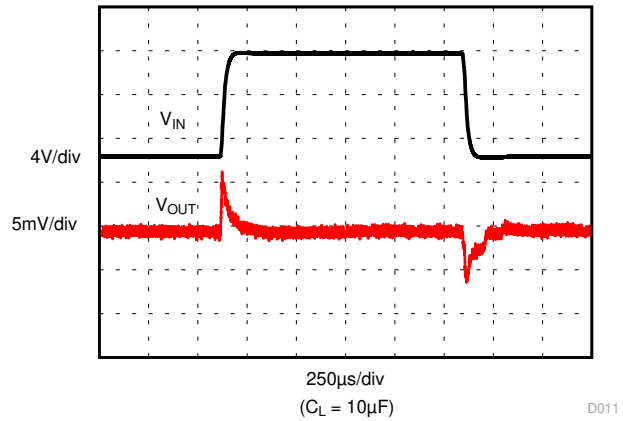

Figure 6-15. Line Transient

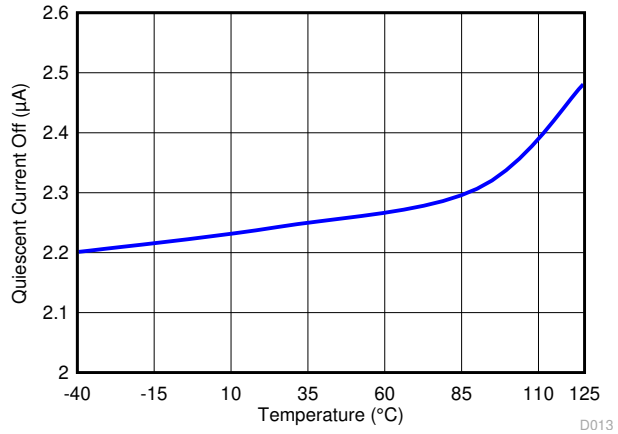

Figure 6-16. Quiescent Current Shutdown Mode

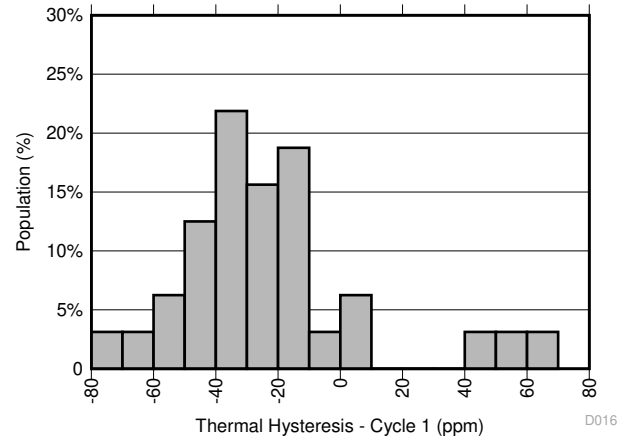

Figure 6-17. Thermal Hysteresis Distribution (Cycle 1)

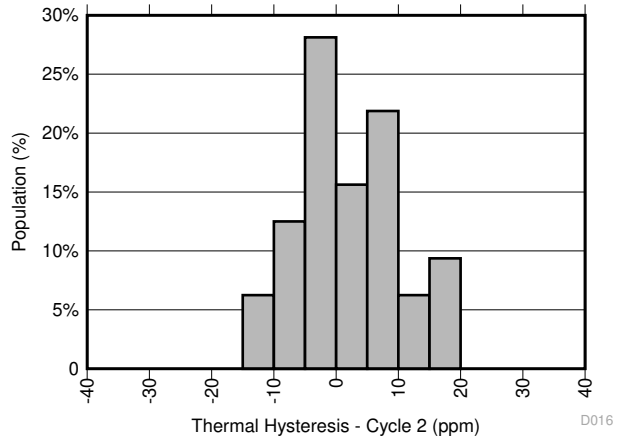

Figure 6-18. Thermal Hysteresis Distribution (Cycle 2)

Copyright © 2026 Texas Instruments Incorporated

6.6 Typical Characteristics (continued)

at T_A = 25°C, V_{IN} = V_{EN} = 12V, I_L = 0mA, C_L = 10µF, C_{IN} = 0.1µF (unless otherwise noted)

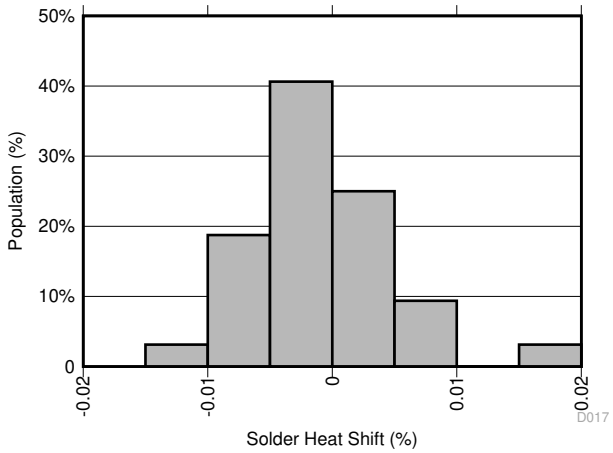

Refer to Section 7.1 for more information

Figure 6-19. Solder Heat Shift Distribution

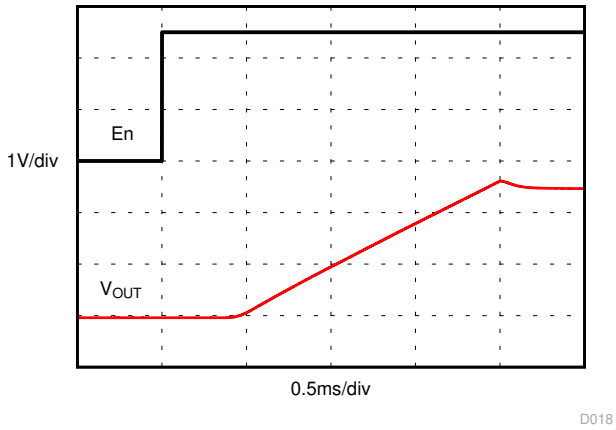

Figure 6-20. Turn-on Time (Enable)

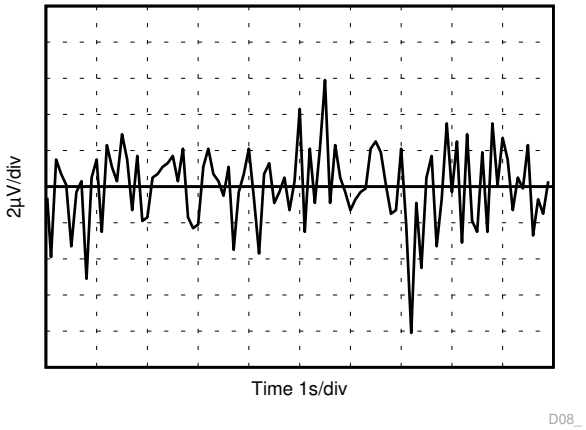

Figure 6-21. 0.1Hz to 10Hz Noise (V_{OUT})

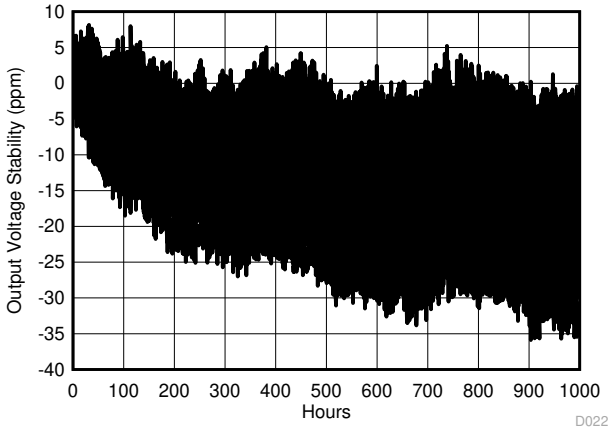

Figure 6-22. Long Term Stability - 1000 hours (V_{OUT})

7 Parameter Measurement Information

7.1 Solder Heat Shift

The materials used in the manufacture of the REF34xx have differing coefficients of thermal expansion, resulting in stress on the device die when the part is heated. Mechanical and thermal stress on the device die can cause the output voltages to shift, degrading the initial accuracy specifications of the product. Reflow soldering is a common cause of this error.

In order to illustrate this effect, a total of 32 devices were soldered on 2 printed circuit boards [16 devices on each printed circuit board (PCB)] using lead-free solder paste and the paste manufacturer suggested reflow profile. The reflow profile is as shown in Figure 7-1. The printed circuit board is comprised of FR4 material. The board thickness is 1.65mm and the area is 114mm × 152mm.

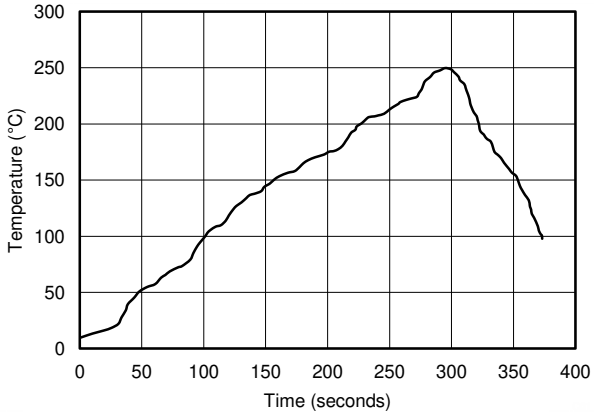

Figure 7-1. Reflow Profile

The reference output voltage is measured before and after the reflow process; the typical shift is displayed in Figure 7-2. Although all tested units exhibit very low shifts (< 0.01%), higher shifts are also possible depending on the size, thickness, and material of the printed circuit board. An important note is that the histograms display the typical shift for exposure to a single reflow profile. Exposure to multiple reflows, as is common on PCBs with surface-mount components on both sides, causes additional shifts in the output bias voltage. If the PCB is exposed to multiple reflows, the device must be soldered in the last pass to minimize its exposure to thermal stress.

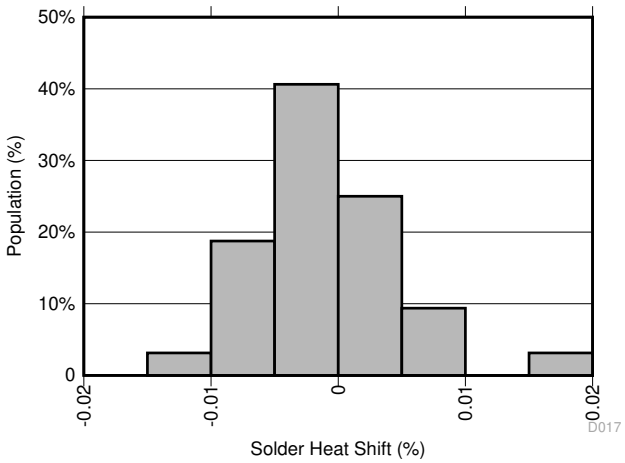

Figure 7-2. Solder Heat Shift Distribution, V_{OUT} (%)

Copyright © 2026 Texas Instruments Incorporated

7.2 Long-Term Stability

One of the key parameters of the REF34xx references is long-term stability. Typical characteristic expressed as: curves shows the typical drift value for the REF34xx is 25ppm from 0 to 1000 hours. This parameter is characterized by measuring 32 units at regular intervals for a period of 1000 hours. It is important to understand that long-term stability is not ensured by design and that the output from the device may shift beyond the typical 25ppm specification at any time. For systems that require highly stable output voltages over long periods of time, the designer should consider burning in the devices prior to use to minimize the amount of output drift exhibited by the reference over time.

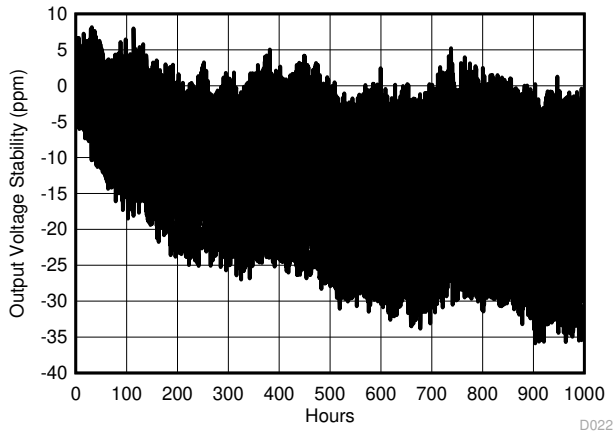

Figure 7-3. Long Term Stability - 1000 hours (V_{OUT})

7.3 Thermal Hysteresis

Thermal hysteresis is measured with the REF34xx soldered to a PCB, similar to a real-world application. Thermal hysteresis for the device is defined as the change in output voltage after operating the device at 25°C, cycling the device through the specified temperature range, and returning to 25°C. The PCB bakes at 150°C for 30 minutes before thermal hysteresis was measured. Hysteresis is calculated in Equation 1:

$$V_{HYST} = \left(\frac{|V_{PRE} - V_{POST}|}{V_{NOM}}\right) \times 10^6 (\text{ppm}) \tag{1}$$

where

- V_{HYST} = thermal hysteresis (in units of ppm)
- V_{PRE} = output voltage measured at 25°C pre-temperature cycling
- V_{POST} = output voltage measured after the device has cycled from 25°C through the specified temperature range of –40°C to +125°C and returns to 25°C.
- V_{NOM} = the specified output voltage

Typical thermal hysteresis distribution is as shown in Figure 7-4 and Figure 7-5.

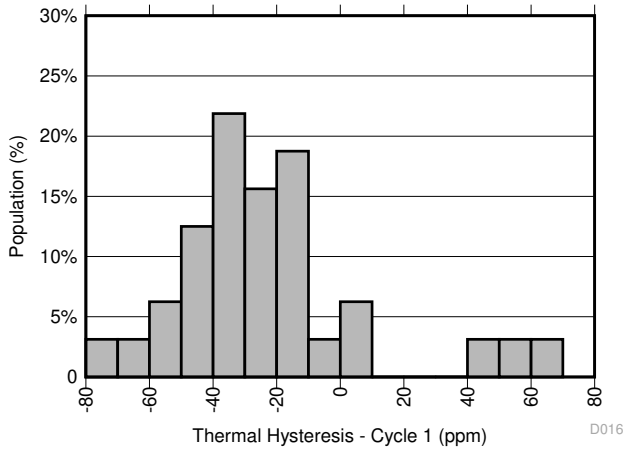

Figure 7-4. Thermal Hysteresis Distribution Cycle 1 (V_{OUT})

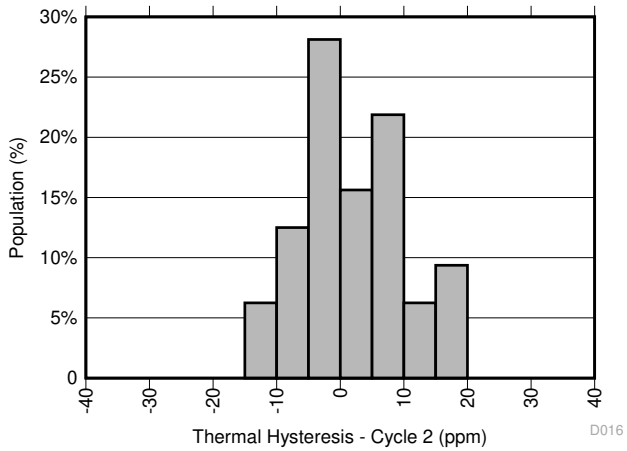

Figure 7-5. Thermal Hysteresis Distribution Cycle 2 (V_{OUT})

7.4 Power Dissipation

The REF34xx voltage references are capable of source and sink up to 10mA of load current across the rated input voltage range. However, when used in applications subject to high ambient temperatures, the input voltage and load current must be carefully monitored to ensure that the device does not exceeded its maximum power dissipation rating. The maximum power dissipation of the device can be calculated with Equation 2:

$$T_J = T_A + P_D \times R_{\theta JA} \tag{2}$$

where

- T_J is the device junction temperature
- T_A is the ambient temperature
- P_D is the device power dissipation
- $R_{\theta JA}$ is the package (junction-to-air) thermal resistance

Because of this relationship, acceptable load current in high temperature conditions may be less than the maximum current-sourcing capability of the device. In no case should the device be operated outside of its maximum power rating because doing so can result in premature failure or permanent damage to the device.

Copyright © 2026 Texas Instruments Incorporated

7.5 Noise Performance

Typical 0.1Hz to 10Hz voltage noise can be seen in Figure 7-6. Device noise increases with output voltage and operating temperature. Additional filtering can be used to improve output noise levels, although care must be taken to ensure the output impedance does not degrade ac performance. Peak-to-peak noise measurement setup is shown in Figure 7-6.

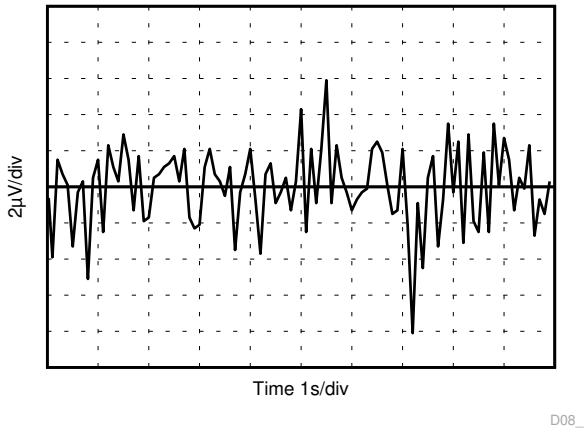

Figure 7-6. 0.1Hz to 10Hz Noise (V_{OUT})

8 Detailed Description

8.1 Overview

The REF34xx is family of low-noise, precision band-gap voltage references that are specifically designed for excellent initial voltage accuracy and drift. Section 8.2 shows a simplified block diagram of the REF34xx with basic band-gap topology.

8.2 Functional Block Diagram

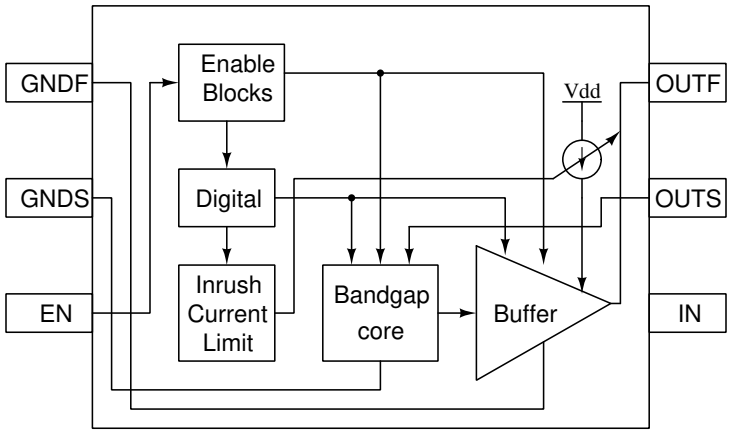

8.3 Feature Description

8.3.1 Supply Voltage

The REF34xx family of references features an extremely low dropout voltage. For loaded conditions, a typical dropout voltage versus load is shown on the front page. The REF34xx features a low quiescent current that is extremely stable over changes in both temperature and supply. The typical room temperature quiescent current is 72µA, and the maximum quiescent current over temperature is just 95µA. Supply voltages below the specified levels can cause the REF34xx to momentarily draw currents greater than the typical quiescent current. Use a power supply with a fast rising edge and low output impedance to easily prevent this issue.

8.3.2 Low Temperature Drift

The REF34xx is designed for minimal drift error, which is defined as the change in output voltage over temperature. The drift is calculated using the box method, as described by Equation 3. For this equation, V_{REF} is V_{OUT} which is the output voltage seen at the junction of OUT_F and OUT_S.

$$\text{Drift} = \left(\frac{V_{REF[MAX]} - V_{REF[MIN]}}{V_{REF[25°C]} \times \text{Temperature Range}}\right) \times 10^6 \tag{3}$$

8.3.3 Load Current

The REF34xx family is specified to deliver a current load of ±10mA per output. The device temperature increases according to Equation 4:

$$T_J = T_A + P_D \times R_{\theta JA} \tag{4}$$

where

- T_J = junction temperature (°C)
- T_A = ambient temperature (°C)
- P_D = power dissipated (W)
- $R_{\theta JA}$ = junction-to-ambient thermal resistance (°C/W)

The REF34xx maximum junction temperature must not exceed the absolute maximum rating of 150°C.

Copyright © 2026 Texas Instruments Incorporated

8.4 Device Functional Modes

8.4.1 EN Pin

When the EN pin of the REF34xx is pulled high, the device is in active mode. The device must be in active mode for normal operation. The REF34xx can be placed in a low-power mode by pulling the enable pin, EN, low. When in shutdown mode, the output of the device becomes high impedance and the quiescent current of the device reduces to 2 µA in shutdown mode. The EN pin must not be pulled higher than VIN supply voltage. See Section 6.5 for logic high and logic low voltage levels.

8.4.2 Negative Reference Voltage

For applications requiring a negative and positive reference voltage, the REF34xx and OPA735 can be used to provide a dual-supply reference from a 5-V supply. Figure 8-1 shows the REF34xx used to provide a 2.5-V supply reference voltage. The low drift performance of the REF34xx complements the low offset voltage and zero drift of the OPA735 to provide an accurate solution for split-supply applications. Take care to match the temperature coefficients of R1 and R2.

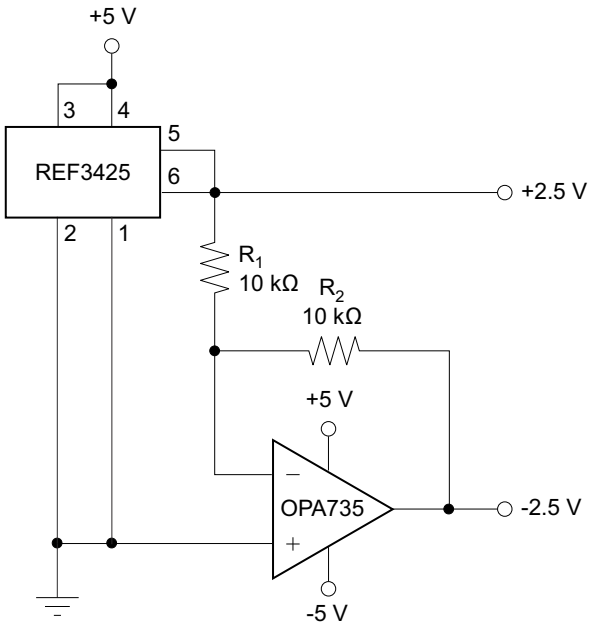

Copyright © 2017, Texas Instruments Incorporated

Figure 8-1. REF34xx and OPA735 Create Positive and Negative Reference Voltages

9 Application and Implementation

Note

Information in the following applications sections is not part of the TI component specification, and TI does not warrant its accuracy or completeness. TI's customers are responsible for determining suitability of components for their purposes, as well as validating and testing their design implementation to confirm system functionality.

9.1 Application Information

As this device has many applications and setups, there are many situations that are not characterized in detail in this data sheet. Basic applications includes positive and negative voltage reference and data acquisition systems. The table below shows the typical application of REF34xx and its companion ADC/DAC.

Table 9-1. Typical Applications and Companion ADC/DAC

Applications	ADC/DAC
PLC - DCS	DAC8881, ADS8332, ADS8568, ADS8317, ADS8588S, ADS1287
Display Test Equipment	ADS8332
Video Surveillance - Thermal Cameras	ADS7279
Medical Blood Glucose Meter	ADS1112

9.2 Typical Application: Basic Voltage Reference Connection

The circuit shown in Figure 9-1 shows the basic configuration for the REF34xx references. Connect bypass capacitors according to the guidelines in Section 9.2.2.1.

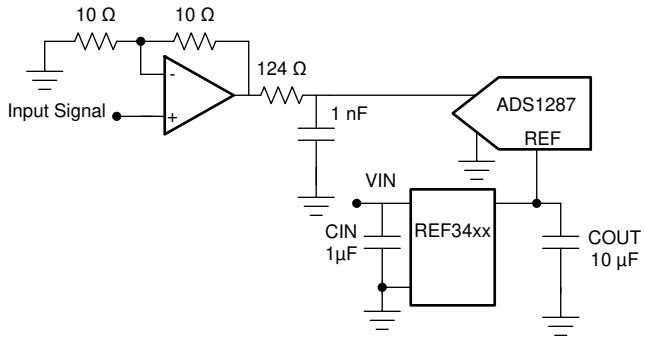

Copyright © 2017, Texas Instruments Incorporated

Figure 9-1. Basic Reference Connection

9.2.1 Design Requirements

A detailed design procedure is described based on a design example. For this design example, use the parameters listed in Table 9-2 as the input parameters.

Table 9-2. Design Example Parameters

DESIGN PARAMETER	VALUE
Input voltage V_{IN}	5V
Output voltage V_{OUT}	2.5V
REF34xx input capacitor	1µF
REF34xx output capacitor	10µF

Copyright © 2026 Texas Instruments Incorporated

9.2.2 Detailed Design Procedure

9.2.2.1 Input and Output Capacitors

A 1µF to 10µF electrolytic or ceramic capacitor can be connected to the input to improve transient response in applications where the supply voltage may fluctuate. Connect an additional 0.1µF ceramic capacitor in parallel to reduce high frequency supply noise.

A ceramic capacitor of at least a 0.1µF must be connected to the output to improve stability and help filter out high frequency noise. An additional 1µF to 10µF electrolytic or ceramic capacitor can be added in parallel to improve transient performance in response to sudden changes in load current; however, keep in mind that doing so increases the turnon time of the device.

Best performance and stability is attained with low-ESR, low-inductance ceramic chip-type output capacitors (X5R, X7R, or similar). If using an electrolytic capacitor on the output, place a 0.1µF ceramic capacitor in parallel to reduce overall ESR on the output.

9.2.2.2 4-Wire Kelvin Connections

Current flowing through a PCB trace produces an IR voltage drop, and with longer traces, this drop can reach several millivolts or more, introducing a considerable error into the output voltage of the reference. A 1-inch long, 5mm wide trace of 1oz copper has a resistance of approximately 100mΩ at room temperature; at a load current of 10mA, this can introduce a full millivolt of error. In an ideal board layout, the reference must be mounted as close as possible to the load to minimize the length of the output traces, and, therefore, the error introduced by voltage drop. However, in applications where this is not possible or convenient, force and sense connections (sometimes referred to as Kelvin sensing connections) are provided as a means of minimizing the IR drop and improving accuracy.

Kelvin connections work by providing a set of high impedance voltage-sensing lines to the output and ground nodes. Because very little current flows through these connections, the IR drop across their traces is negligible, and the output and ground voltage information can be obtain with minimum IR drop error.

It is always advantageous to use Kelvin connections whenever possible. However, in applications where the IR drop is negligible or an extra set of traces cannot be routed to the load, the force and sense pins for both V_{OUT} and GND can simply be tied together, and the device can be used in the same fashion as a normal 3-terminal reference (as shown in Figure 8-1).

9.2.2.3 V_{IN} Slew Rate Considerations

In applications with slow-rising input voltage signals, the reference exhibits overshoot or other transient anomalies that appear on the output. These phenomena also appear during shutdown as the internal circuitry loses power.

To avoid such conditions, ensure that the input voltage wave-form has both a rising and falling slew rate close to 6V/ms.

9.2.2.4 Shutdown/Enable Feature

The REF34xx references can be switched to a low power shut-down mode when a voltage of 0.5V or lower is input to the EN pin. Likewise, the reference becomes operational for EN voltages of 1.6V or higher. During shutdown, the supply current drops to less than 2µA, useful in applications that are sensitive to power consumption.

If using the shutdown feature, ensure that the EN pin voltage does not fall between 0.5V and 1.6V because this causes a large increase in the supply current of the device and may keep the reference from starting up correctly. If not using the shutdown feature, however, the EN pin can simply be tied to the IN pin, and the reference remains operational continuously.

Copyright © 2026 Texas Instruments Incorporated

9.2.3 Application Curves

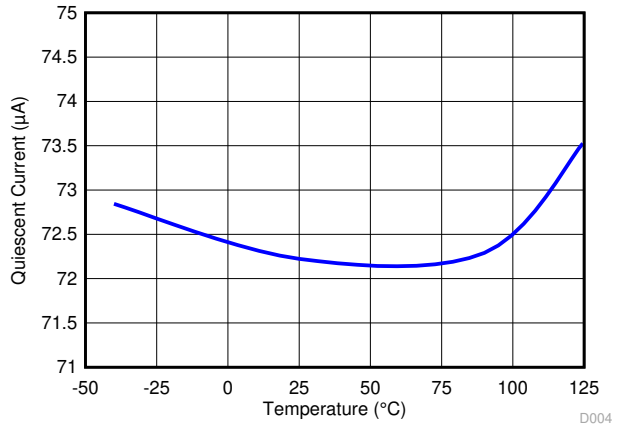

Figure 9-2. Quiescent Current vs Temperature

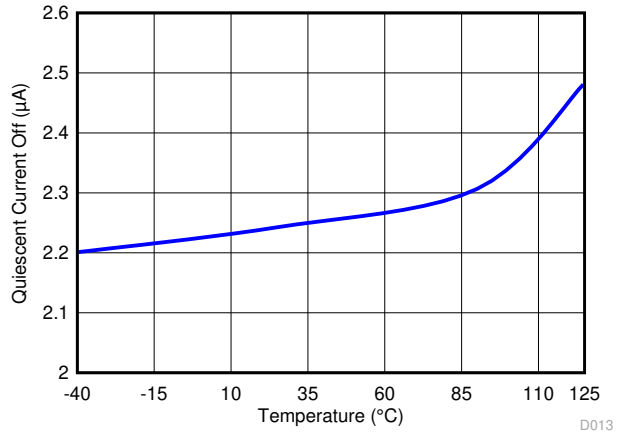

Figure 9-3. Quiescent Current Shutdown Mode

9.3 Power Supply Recommendations

The REF34xx family of references feature an extremely low-dropout voltage. These references can be operated with a supply of only 50mV above the output voltage. TI recommends a supply bypass capacitor ranging between 0.1µF to 10µF.

9.4 Layout

9.4.1 Layout Guidelines

Figure 9-4 illustrates an example of a PCB layout for a data acquisition system using the REF34xx. Some key considerations are:

- Connect low-ESR, 0.1µF ceramic bypass capacitors at IN, OUT_F, VOUT of the REF34xx and REF34xxT.
- Decouple other active devices in the system per the device specifications.
- Using a solid ground plane helps distribute heat and reduces electromagnetic interference (EMI) noise pickup.
- Place the external components as close to the device as possible. This configuration prevents parasitic errors (such as the Seebeck effect) from occurring.
- Do not run sensitive analog traces in parallel with digital traces. Avoid crossing digital and analog traces if possible, and only make perpendicular crossings when absolutely necessary.

9.4.2 Layout Example

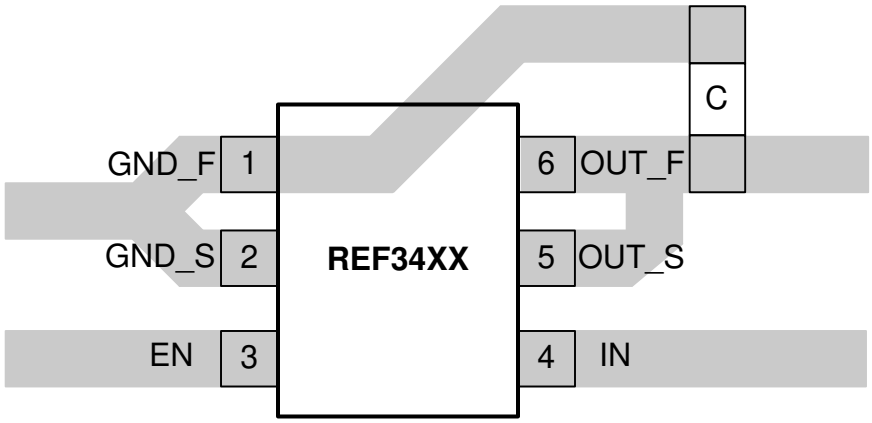

Figure 9-4. REF34xx Layout Example

Copyright © 2026 Texas Instruments Incorporated

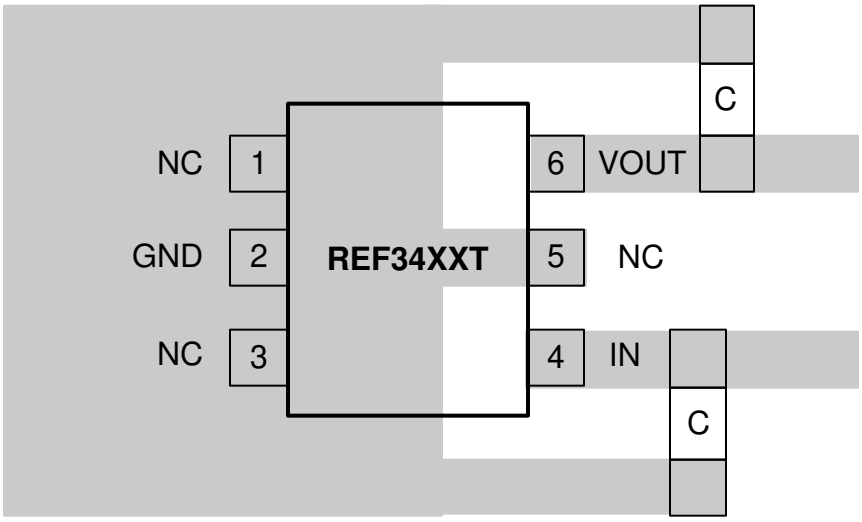

Figure 9-5. REF34xxT Layout Example

10 Device and Documentation Support

10.1 Documentation Support

10.1.1 Related Documentation

For related documentation see the following:

- Texas Instruments, *INA21x Voltage Output, Low- or High-Side Measurement, Bidirectional, Zero-Drift Series, Current-Shunt Monitors* data sheet
- Texas Instruments, *Low-Drift Bidirectional Single-Supply Low-Side Current Sensing Reference Design* reference guide

10.2 Receiving Notification of Documentation Updates

To receive notification of documentation updates, navigate to the device product folder on ti.com. Click on *Notifications* to register and receive a weekly digest of any product information that has changed. For change details, review the revision history included in any revised document.

10.3 Support Resources

TI E2E™ support forums are an engineer's go-to source for fast, verified answers and design help — straight from the experts. Search existing answers or ask your own question to get the quick design help you need.

Linked content is provided "AS IS" by the respective contributors. They do not constitute TI specifications and do not necessarily reflect TI's views; see TI's Terms of Use.

10.4 Trademarks

TI E2E™ is a trademark of Texas Instruments.
All trademarks are the property of their respective owners.

10.5 Electrostatic Discharge Caution

This integrated circuit can be damaged by ESD. Texas Instruments recommends that all integrated circuits be handled with appropriate precautions. Failure to observe proper handling and installation procedures can cause damage.

ESD damage can range from subtle performance degradation to complete device failure. Precision integrated circuits may be more susceptible to damage because very small parametric changes could cause the device not to meet its published specifications.

10.6 Glossary

TI Glossary	This glossary lists and explains terms, acronyms, and definitions.

11 Revision History

NOTE: Page numbers for previous revisions may differ from page numbers in the current version.

Changes from Revision F (June 2021) to Revision G (April 2026)	Page
• Moved the REF3425, REF3430, REF3433, REF3440, REF3450 devices to the REF30 product folder on TI.com and updated the datasheet header	1
• Updated the numbering format for tables, figures, and cross-references throughout the document	1
• Changed *Device Information* table to *Package Information*	1
• Moved *the Voltage Reference Recommendation for Data Converters* table from *Applications* to *Device Comparison*	3

Changes from Revision E (April 2021) to Revision F (June 2021)	Page
• Added low dropout line item to Features section	1
• Consolidated part numbers in Device Information table	1

Copyright © 2026 Texas Instruments Incorporated

- Changed Thermal Information parameters to correctly reflect DBV package..... 5
- Added second cycle thermal hysteresis plot..... 13
- Linked product numbers in table to datasheets.....18

12 Mechanical, Packaging, and Orderable Information

The following pages include mechanical packaging and orderable information. This information is the most current data available for the designated devices. This data is subject to change without notice and revision of this document. For browser-based versions of this data sheet, refer to the left-hand navigation.

PACKAGING INFORMATION

Orderable part number	Status (1)	Material type (2)	Package | Pins	Package qty | Carrier	RoHS (3)	Lead finish/ Ball material (4)	MSL rating/ Peak reflow (5)	Op temp (°C)	Part marking (6)
REF3425IDBVR	Active	Production	null (null) |	3000 | LARGE T&R	Yes	NIPDAU	Level-2-250C-1 YEAR	-40 to 125	19ED
REF3425IDBVR.B	Active	Production	SOT-23 (DBV) | 6	3000 | LARGE T&R	Yes	NIPDAU	Level-2-250C-1 YEAR	-40 to 125	19ED
REF3425IDBVRG4	Active	Production	null (null) |	3000 | LARGE T&R	Yes	NIPDAU	Level-2-250C-1 YEAR	-40 to 125	19ED
REF3425IDBVRG4.B	Active	Production	SOT-23 (DBV) | 6	3000 | LARGE T&R	Yes	NIPDAU	Level-2-250C-1 YEAR	-40 to 125	19ED
REF3425TIDBVR	Active	Production	null (null) |	3000 | LARGE T&R	Yes	NIPDAUAG	Level-2-260C-1 YEAR	-40 to 125	2EVC
REF3425TIDBVR.B	Active	Production	SOT-23 (DBV) | 6	3000 | LARGE T&R	Yes	NIPDAUAG	Level-2-260C-1 YEAR	-40 to 125	2EVC
REF3430IDBVR	Active	Production	null (null) |	3000 | LARGE T&R	Yes	NIPDAU	Level-2-260C-1 YEAR	-40 to 125	1H6D
REF3430IDBVR.B	Active	Production	SOT-23 (DBV) | 6	3000 | LARGE T&R	Yes	NIPDAU	Level-2-260C-1 YEAR	-40 to 125	1H6D
REF3430TIDBVR	Active	Production	null (null) |	3000 | LARGE T&R	Yes	NIPDAUAG	Level-2-260C-1 YEAR	-40 to 125	2EUC
REF3430TIDBVR.B	Active	Production	SOT-23 (DBV) | 6	3000 | LARGE T&R	Yes	NIPDAUAG	Level-2-260C-1 YEAR	-40 to 125	2EUC
REF3433IDBVR	Active	Production	null (null) |	3000 | LARGE T&R	Yes	NIPDAU	Level-2-260C-1 YEAR	-40 to 125	1H5D
REF3433IDBVR.B	Active	Production	SOT-23 (DBV) | 6	3000 | LARGE T&R	Yes	NIPDAU	Level-2-260C-1 YEAR	-40 to 125	1H5D
REF3433TIDBVR	Active	Production	null (null) |	3000 | LARGE T&R	Yes	NIPDAUAG	Level-2-260C-1 YEAR	-40 to 125	2ETC
REF3433TIDBVR.B	Active	Production	SOT-23 (DBV) | 6	3000 | LARGE T&R	Yes	NIPDAUAG	Level-2-260C-1 YEAR	-40 to 125	2ETC
REF3440IDBVR	Active	Production	null (null) |	3000 | LARGE T&R	Yes	NIPDAU	Level-2-260C-1 YEAR	-40 to 125	1MJD
REF3440IDBVR.B	Active	Production	SOT-23 (DBV) | 6	3000 | LARGE T&R	Yes	NIPDAU	Level-2-260C-1 YEAR	-40 to 125	1MJD
REF3440TIDBVR	Active	Production	null (null) |	3000 | LARGE T&R	Yes	NIPDAUAG	Level-2-260C-1 YEAR	-40 to 125	2ESC
REF3440TIDBVR.B	Active	Production	SOT-23 (DBV) | 6	3000 | LARGE T&R	Yes	NIPDAUAG	Level-2-260C-1 YEAR	-40 to 125	2ESC
REF3450IDBVR	Active	Production	null (null) |	3000 | LARGE T&R	Yes	NIPDAU	Level-2-260C-1 YEAR	-40 to 125	1MKD
REF3450IDBVR.B	Active	Production	SOT-23 (DBV) | 6	3000 | LARGE T&R	Yes	NIPDAU	Level-2-260C-1 YEAR	-40 to 125	1MKD
REF3450TIDBVR	Active	Production	null (null) |	3000 | LARGE T&R	Yes	NIPDAUAG	Level-2-260C-1 YEAR	-40 to 125	2ERC
REF3450TIDBVR.B	Active	Production	SOT-23 (DBV) | 6	3000 | LARGE T&R	Yes	NIPDAUAG	Level-2-260C-1 YEAR	-40 to 125	2ERC

(1) **Status:** For more details on status, see our product life cycle.

(2) **Material type:** When designated, preproduction parts are prototypes/experimental devices, and are not yet approved or released for full production. Testing and final process, including without limitation quality assurance, reliability performance testing, and/or process qualification, may not yet be complete, and this item is subject to further changes or possible discontinuation. If available for ordering, purchases will be subject to an additional waiver at checkout, and are intended for early internal evaluation purposes only. These items are sold without warranties of any kind.

(3) **RoHS values:** Yes, No, RoHS Exempt. See the TI RoHS Statement for additional information and value definition.

(4) **Lead finish/Ball material:** Parts may have multiple material finish options. Finish options are separated by a vertical ruled line. Lead finish/Ball material values may wrap to two lines if the finish value exceeds the maximum column width.

(5) **MSL rating/Peak reflow:** The moisture sensitivity level ratings and peak solder (reflow) temperatures. In the event that a part has multiple moisture sensitivity ratings, only the lowest level per JEDEC standards is shown. Refer to the shipping label for the actual reflow temperature that will be used to mount the part to the printed circuit board.

(6) **Part marking:** There may be an additional marking, which relates to the logo, the lot trace code information, or the environmental category of the part.

Multiple part markings will be inside parentheses. Only one part marking contained in parentheses and separated by a "~" will appear on a part. If a line is indented then it is a continuation of the previous line and the two combined represent the entire part marking for that device.

Important Information and Disclaimer: The information provided on this page represents TI's knowledge and belief as of the date that it is provided. TI bases its knowledge and belief on information provided by third parties, and makes no representation or warranty as to the accuracy of such information. Efforts are underway to better integrate information from third parties. TI has taken and continues to take reasonable steps to provide representative and accurate information but may not have conducted destructive testing or chemical analysis on incoming materials and chemicals. TI and TI suppliers consider certain information to be proprietary, and thus CAS numbers and other limited information may not be available for release.

In no event shall TI's liability arising out of such information exceed the total purchase price of the TI part(s) at issue in this document sold by TI to Customer on an annual basis.

OTHER QUALIFIED VERSIONS OF REF34, REF3425, REF3430, REF3433, REF3440 :

- Automotive : REF34-Q1
- Enhanced Product : REF3425-EP, REF3430-EP, REF3433-EP, REF3440-EP

NOTE: Qualified Version Definitions:

- Automotive - Q100 devices qualified for high-reliability automotive applications targeting zero defects
- Enhanced Product - Supports Defense, Aerospace and Medical Applications

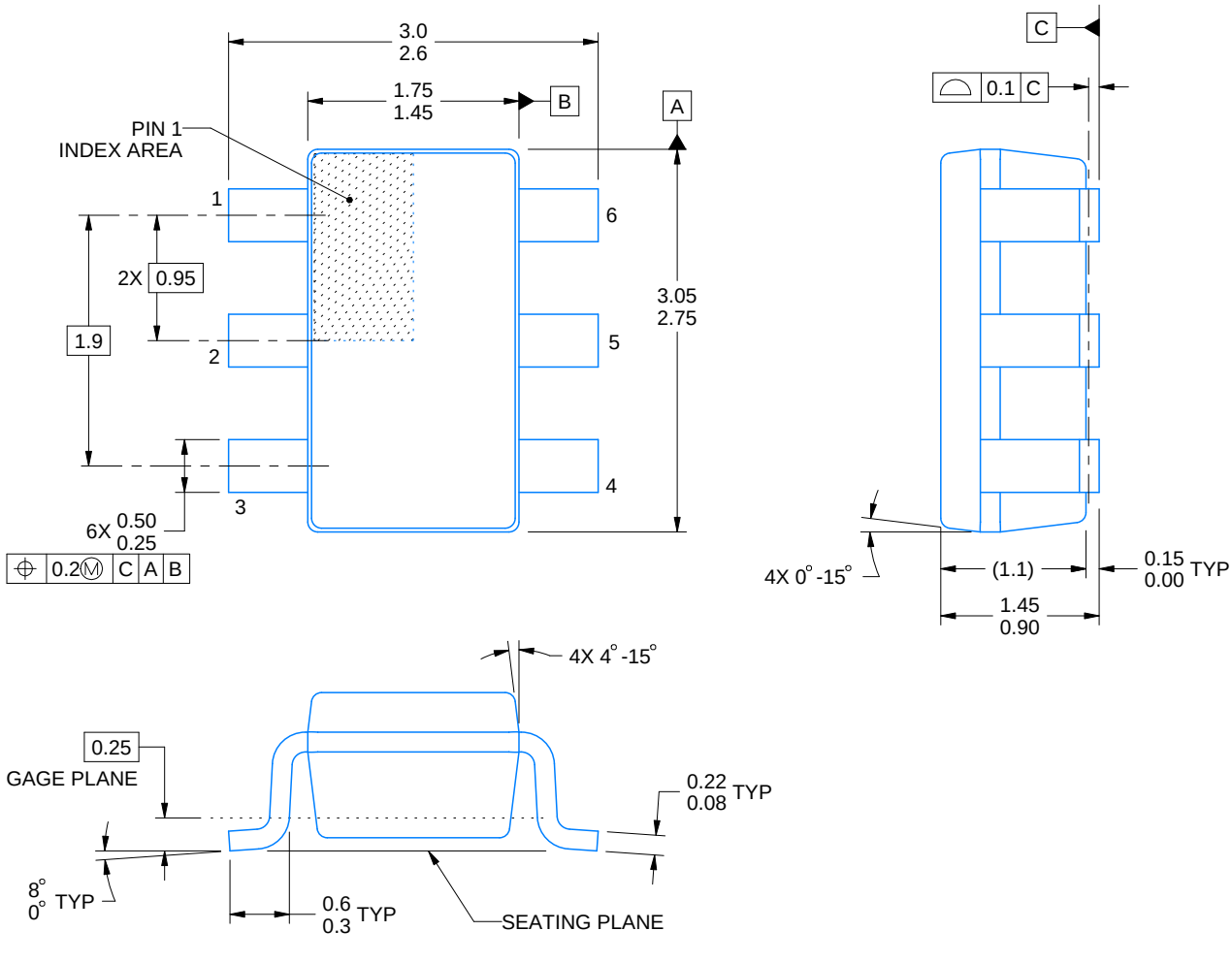

4214840/G 08/2024

NOTES:

1. All linear dimensions are in millimeters. Any dimensions in parenthesis are for reference only. Dimensioning and tolerancing per ASME Y14.5M.
2. This drawing is subject to change without notice.
3. Body dimensions do not include mold flash or protrusion. Mold flash and protrusion shall not exceed 0.25 per side.
4. Leads 1,2,3 may be wider than leads 4,5,6 for package orientation.
5. Refernce JEDEC MO-178.

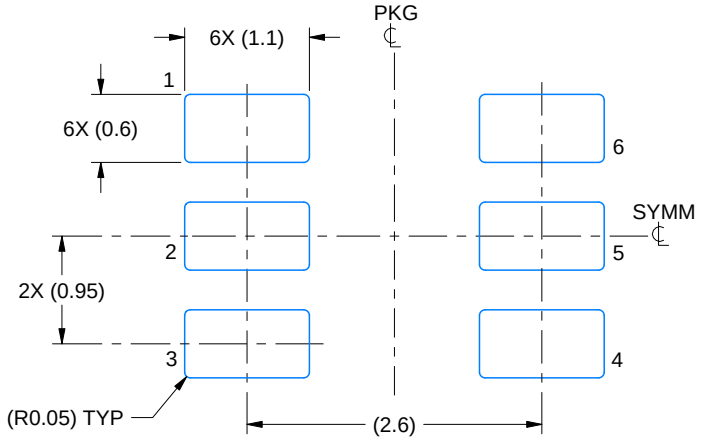

LAND PATTERN EXAMPLE
EXPOSED METAL SHOWN
SCALE:15X

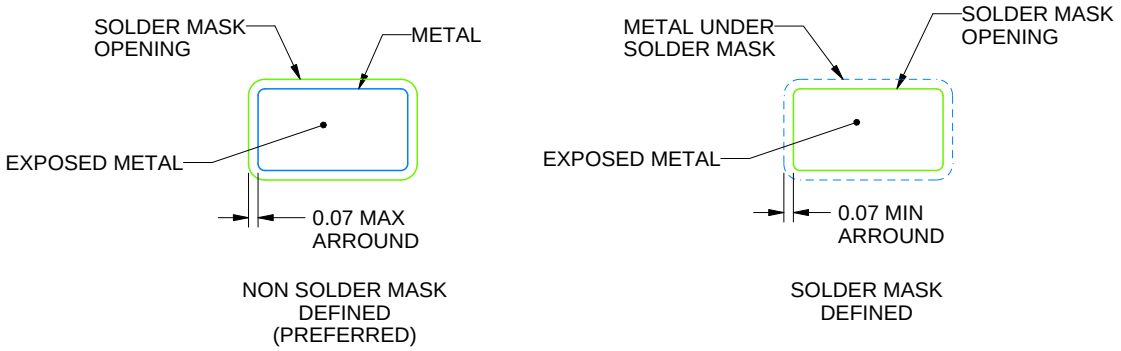

SOLDER MASK DETAILS

4214840/G 08/2024

NOTES: (continued)

6. Publication IPC-7351 may have alternate designs.
7. Solder mask tolerances between and around signal pads can vary based on board fabrication site.

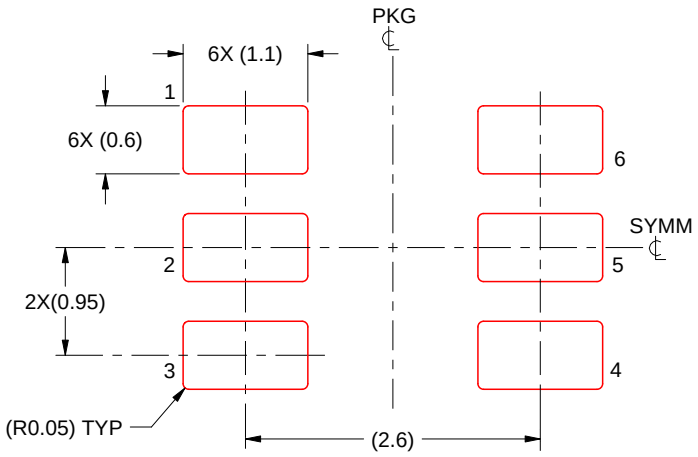

SOLDER PASTE EXAMPLE
BASED ON 0.125 mm THICK STENCIL
SCALE:15X

4214840/G 08/2024

NOTES: (continued)

8. Laser cutting apertures with trapezoidal walls and rounded corners may offer better paste release. IPC-7525 may have alternate design recommendations.
9. Board assembly site may have different recommendations for stencil design.

IMPORTANT NOTICE AND DISCLAIMER

TI PROVIDES TECHNICAL AND RELIABILITY DATA (INCLUDING DATASHEETS), DESIGN RESOURCES (INCLUDING REFERENCE DESIGNS), APPLICATION OR OTHER DESIGN ADVICE, WEB TOOLS, SAFETY INFORMATION, AND OTHER RESOURCES “AS IS” AND WITH ALL FAULTS, AND DISCLAIMS ALL WARRANTIES, EXPRESS AND IMPLIED, INCLUDING WITHOUT LIMITATION ANY IMPLIED WARRANTIES OF MERCHANTABILITY, FITNESS FOR A PARTICULAR PURPOSE OR NON-INFRINGEMENT OF THIRD PARTY INTELLECTUAL PROPERTY RIGHTS.

These resources are intended for skilled developers designing with TI products. You are solely responsible for (1) selecting the appropriate TI products for your application, (2) designing, validating and testing your application, and (3) ensuring your application meets applicable standards, and any other safety, security, regulatory or other requirements.

These resources are subject to change without notice. TI grants you permission to use these resources only for development of an application that uses the TI products described in the resource. Other reproduction and display of these resources is prohibited. No license is granted to any other TI intellectual property right or to any third party intellectual property right. TI disclaims responsibility for, and you fully indemnify TI and its representatives against any claims, damages, costs, losses, and liabilities arising out of your use of these resources.

TI’s products are provided subject to TI’s Terms of Sale, TI’s General Quality Guidelines, or other applicable terms available either on ti.com or provided in conjunction with such TI products. TI’s provision of these resources does not expand or otherwise alter TI’s applicable warranties or warranty disclaimers for TI products. Unless TI explicitly designates a product as custom or customer-specified, TI products are standard, catalog, general purpose devices.

TI objects to and rejects any additional or different terms you may propose.

Copyright © 2026, Texas Instruments Incorporated

Last updated 10/2025