ST67W611M1

Datasheet

Low-power Wi-Fi 6 - Bluetooth® LE combo coprocessor module

Product status
ST67W611M1

Features

Module content

- All-in-one Wi-Fi®/Bluetooth® LE wireless microcontroller
- Embedded 40 MHz high-precision crystal
- All RF components for transmission and reception matching network, including antenna filter
- Three variants: embedded antenna (-B version), RF connector (-U version), RF pin (-P version)

Standard

- IEEE 802.11b/g/n/ax
- Bluetooth® LE 5.4
- Regulatory certifications: CE/RED, UKCA, FCC, IC, JRF/ARIB, ACMA/RSM, RCM, BIS/WPC, NBTC, RoHS, REACH, ANATEL
- Wi-Fi and Bluetooth LE can run concurrently dynamically

Wi-Fi

- Wi-Fi 6, 2.4 GHz RF transceiver
  Wi-Fi 20/40 MHz bandwidth, 1T1R
  Wi-Fi security WPS/WEP/WPA/WPA2/WPA3
- STA, SoftAP, concurrent STA + SoftAP
- Maximum Tx power (11b 1 Mbps): 21 dBm
- Tx power (HE40 and MCS9): 16 dBm
- Rx sensitivity (HE40 and MCS9): -67 dBm
- Application throughput up to 17 Mbps (TCP)
- LDPC, STBC, beamforming, DL/UL OFDMA, MU-MIMO, target wake time (TWT), spatial reuse (SR), dual carrier modulation (DCM), extended range (ER)
- A-MPDU, A-MSDU, immediate block ACK, fragmentation, and defragmentation

Bluetooth® LE

- Maximum Tx power: + 10 dBm
- Rx sensitivity
  - Bluetooth® LE (2 Mbps): -96.5 dBm
  - Bluetooth® LE (1 Mbps): -99 dBm

System peripherals

- SPI
- UART

Security

- PSA Level 1 certified
- Security system encryption engine
- Secure services: Secure boot and FOTA (firmware over-the-air)

Voltage

- Input voltage: 3.3 V
- I/O voltage: 1.8 V/3.3 V

Environmental specifications

- Temperature:
  - Operating: -40°C ~ +85°C
  - Storage: -40°C ~ +125°C
- Humidity:
  - Relative: < 90% noncondensing
  - Storage: < 90% noncondensing

All packages are ECOPACK2 compliant.

Application

- Smart homes:
  - Door lock and door-bells
  - Cameras
  - Smart hub
- Industrial IoT:
  - Industrial control IoT hub/gateways
  - Smart utility metering
  - EV chargers
- Smart appliances:
  - White goods
  - Kitchen appliances
- Healthcare:
  - Portable patient monitors
  - Handled devices

1 Introduction

This document provides information on ST67W611M1 modules, such as description, pin assignment and definition, electrical characteristics, packaging and ordering information.

For more information, refer to the following wiki page: https://wiki.st.com/stm32mcu/wiki/Connectivity:ST67W611M1_overview.

2 Description

Powered by Qualcomm high-performance 1 × 1 2.4 GHz Wi-Fi 6 and Bluetooth 5.4 modem, the STMicroelectronics ST67W611M1 LGA module is purposely designed to pack processing capabilities, Wi-Fi and Bluetooth LE combo connectivity, and on-module memory into a single 32-pin LGA form factor.

This all-in-one design and capability contribute to reduced costs and enhanced performance, making it an attractive choice for IoT edge devices requiring a single-chip solution.

ST67W611M1 operates as an IoT connectivity transceiver, with an external STM32 host MCU running applications.

ST67W611M1 integrates:

- A PCB antenna (version -B), a RF connector (version-U) for external antenna, or version with a dedicated RF pin typically for support of multi-antenna implementations with external RF switch
- 4 MB NOR flash
- 40 MHz high-precision quartz for optimal RF performance
- SMPS functionality and associated bill of material (BOM)
- All needed discrete components to reduce the overall board BOM
- Data interface through SPI
- 32768 Hz internal oscillator. For low-power use cases, two pins are provided to use a 32768 Hz quartz. One pin can also be used to receive an accurate 32768 Hz from the host processor.

In addition, the P variant supports:

- External PA/LNA to increase power up to 30 dBm
- Rx antenna diversity to increase the reach of your final product using several antennas.

Figure 1 shows the general block diagram of the device family.

Figure 1. ST67W611M1 block diagram

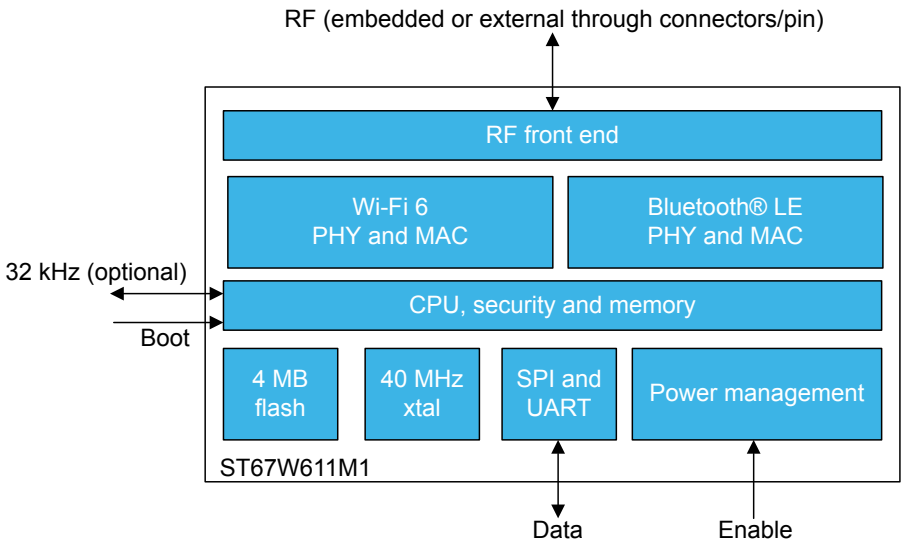

DT75606V3

2.1 UART interface

The UART interface uses two pins (Rx and Tx) and is configured as follows:

- Full-duplex asynchronous communication
- Data bit length: 8 bits
- Stop bit length: 1 bit
- Parity: None
- Hardware flow control (RTS/CTS): None
- Baud rate: 2000000 bauds

2.2 SPI interface

The SPI bus is configured in full-duplex slave mode with three signals (SPI_CLK, SPI_MOSI, SPI_MISO). It is not recommended to connect additional SPI slave devices to the same bus as the ST67W611M1.

The SPI_RDY pin is present and used by the ST67W611M1 as an interrupt towards the host processor.

The SPI_CS pin can also be used as a wake-up signal from the host processor.

Maximum SPI frequency : 40 MHz.

3 Pinouts and pin description

3.1 Pinout schematics

Figure 2. ST67W611M1A6B LGA module PCB antenna

Bottom view

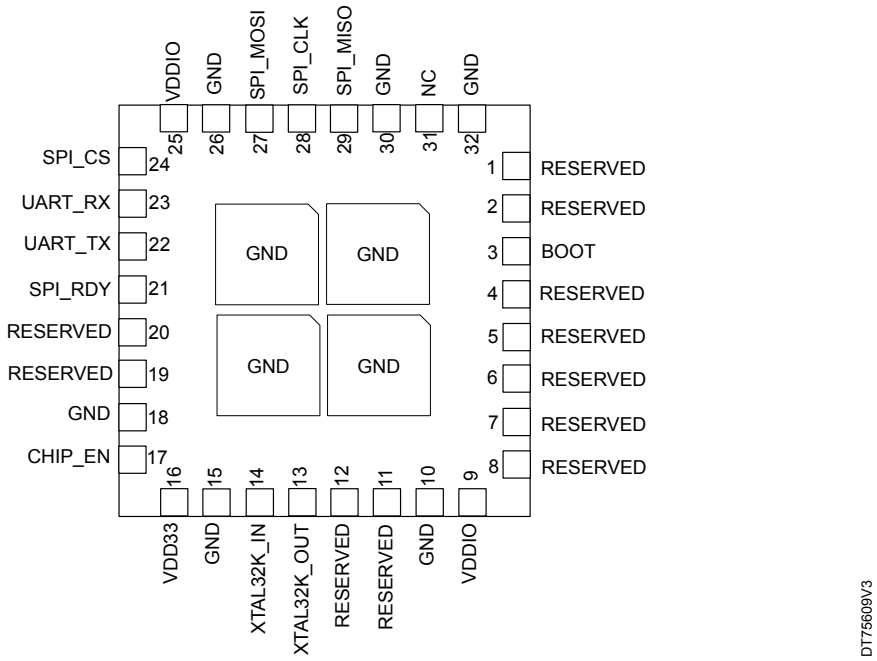

Figure 3. ST67W611M1A6U LGA module antenna connector

Bottom view

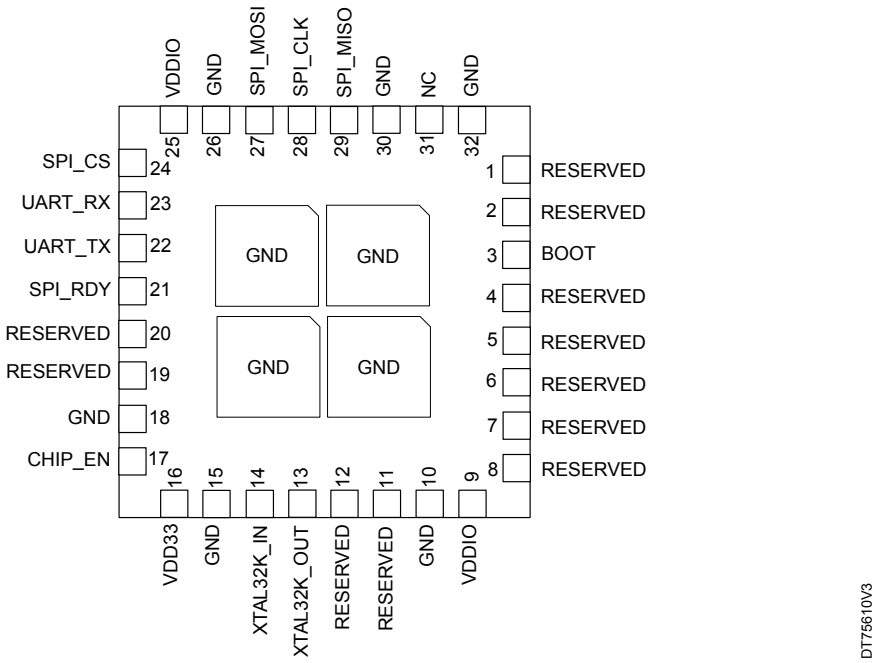

Figure 4. ST67W611M1A6P LGA module pin connector

Bottom view

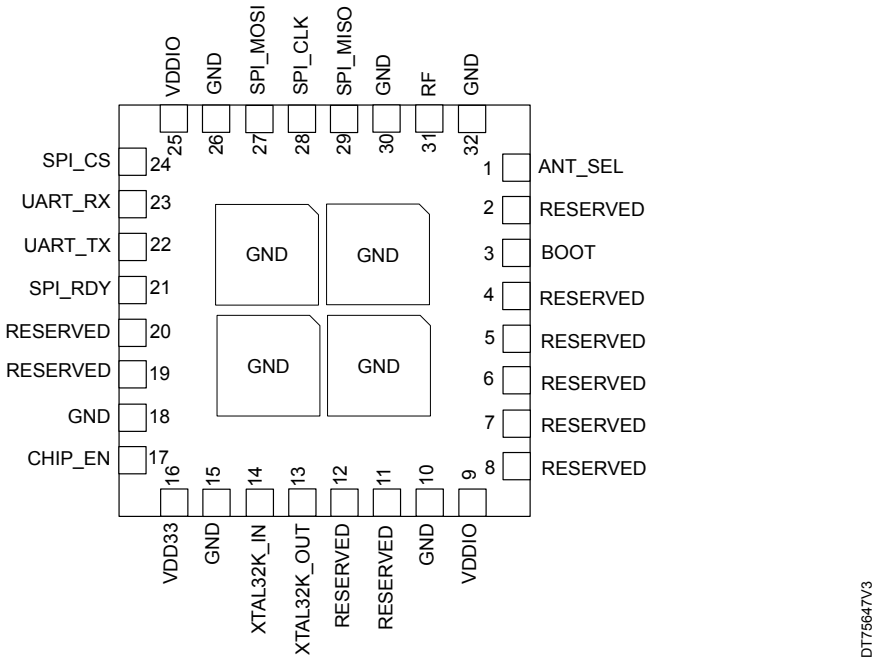

3.2 Pin description

Table 1. ST67W611M1 pin definition

Pin number	Pin name	Pin type	Power domain	Description
1	RESERVED[1] ANT_SEL	I/O	VDDIO	RESERVED: ST67W611M1A6B and ST67W611M1A6U ANT_SEL: ST67W611M1A6P
2	RESERVED[1]	I/O	VDDIO	-
3	BOOT	I/O	VDDIO	Select boot from SPI or from UART.
4	RESERVED[1]	I/O	VDDIO	-
5	RESERVED[1]	I/O	VDDIO	-
6	RESERVED[1]	I/O	VDDIO	-
7	RESERVED[1]	I/O	VDDIO	-
8	RESERVED[1]	I/O	VDDIO	-
9	VDDIO	PWR	-	Host I/O voltage input (3.3 V or 1.8 V)
10	GND	GND	GND	Ground
11	RESERVED[1]	I/O	VDDIO	-
12	RESERVED[1]	I/O	VDDIO	-
13	XTAL32K_OUT	I/O	VDD33	32.768 kHz quartz is optional. 32.768 kHz coming from host processor can be provided on this pin.
14	XTAL32K_IN	I/O	VDD33	32.768 kHz quartz is optional.
15	GND	GND	GND	Ground
16	VDD33	PWR	-	Power input (3.3 V)
17	CHIP_EN	I	-	Chip power on. VDD33 domain signal.
18	GND	GND	GND	Ground
19	RESERVED[1]	I/O	VDDIO	-
20	RESERVED[1]	I/O	VDDIO	-
21	SPI_RDY	I/O	VDDIO	Data ready to be transmitted to host processor.
22	UART_TX	I/O	VDDIO	UART Tx line from ST67W611M1 point of view.
23	UART_RX	I/O	VDDIO	UART Rx line from ST67W611M1 point of view.
24	SPI_CS	I/O	VDDIO	Input of the SPI slave-select from the SPI master/host.
25	VDDIO	PWR	-	Host I/O voltage input (3.3 V or 1.8 V)
26	GND	GND	GND	Ground
27	SPI_MOSI	I/O	VDDIO	Input SPI data from the master/host to the module.
28	SPI_CLK	I/O	VDDIO	Input of SPI clock signal generated by the SPI master/host.
29	SPI_MISO	I/O	VDDIO	Output of SPI data from the module to the SPI master/host.
30	GND	GND	GND	Ground
31	NC RF	- RF	-	NC: ST67W611M1A6B and ST67W611M1A6U RF: ST67W611M1A6P
32	GND	GND	GND	Ground

1. *RESERVED pins must be left NC.*

4 Electrical characteristics

4.1 Absolute maximum ratings

The absolute maximum ratings provided in this section indicate the stress levels that, if exceeded, may result in permanent damage to the device. Functionality outside the specified operating conditions is not guaranteed. Both functionality and reliability are guaranteed only within the defined operating specifications.

Table 2. Absolute maximum ratings

Pin name	Min.	Max.	Unit
VDD33	-0.3	3.63	V
VDDIO	-0.3	3.63	
T_S (storage temperature)[1][2]	-40	+125	°C

1. *The storage temperature range applies when the device is in the off state (the device is not assembled in any platform and is not electrically connected to any voltage or I/O signals). Damage may occur when the device is subjected to this temperature for any length of time.*
2. *For devices shipped in tape and reel, the storage temperature range is [+15 °C +35 °C] and < 90 % relative humidity (RH). ST recommends allowing the device to return to ambient room temperature before usage.*

4.2 Electrical sensitivity characteristics

Table 3. Electrical sensitivity characteristics

Tests, standards, and conditions	Result
ESD contact discharge (IEC 61000-4-2)	2 kV pass
ESD protection (HBM)	2 kV
ESD charged device model (CDM) (250 V/ 500 V/750 V/ 1 kV) 3 pcs each voltage (-B SKU)	1 kV pass

4.3 Operating conditions

Operating conditions include controlled parameters such as power supply voltage, power distribution impedances, and thermal conditions. The ST67W611M1 meets all performance specifications when used within the operating conditions, unless otherwise noted in those sections (provided the absolute maximum ratings have never been exceeded).

Table 4. Recommended power operating range

Pin name	Min.	Typ	Max.	Unit
VDD33	2.97	3.3	3.63	V
VDDIO	1.65	3.3 or 1.8	3.6	

Table 5. Recommended temperature operating range

Item	Min.	Max.	Unit
Ambient temperature	-40	85	°C

4.4 Power-on sequence

To ensure normal power-on startup, the power, reset, and bootstrap pins must meet the corresponding timing requirements.

Figure 5. Power-on sequence

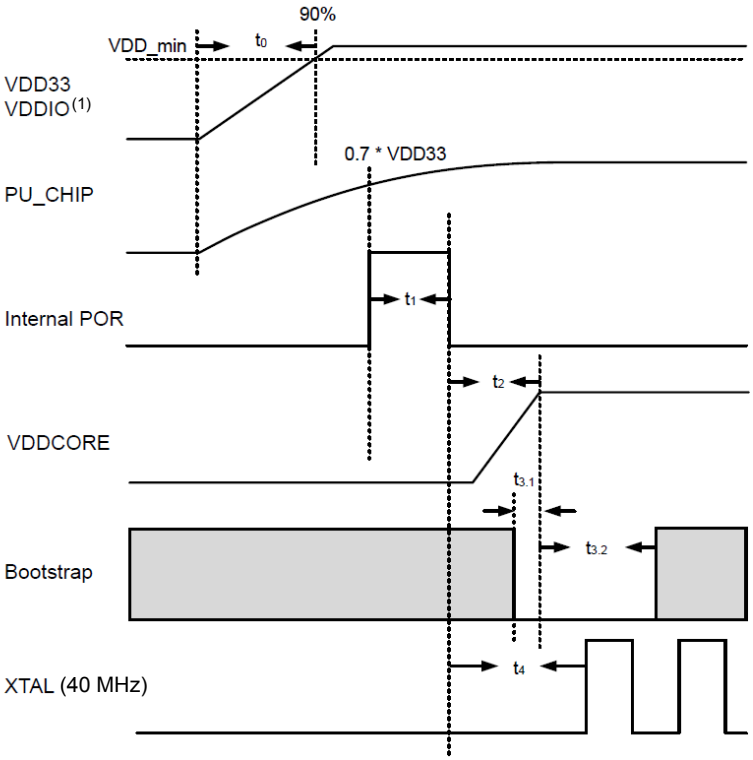

(1) VDD33 and VDDIO can be independent. Both must have reached there minimal value to start communication with host.

Table 6. Power-on sequence parameters

Parameters	Description	Min. (ms)	Typ (ms)	Max. (ms)
t_0	The power supply voltage reaches 90% rise time [(1)]	-	0.1	-
t_1	Internal POR duration	-	3	-
t_2	VDDCORE setting time after internal POR down	-	1	-
$t_{3.1}$	Bootstrap pin [(2)] preparation time before VDDCORE establishment	0	-	-
$t_{3.2}$	Duration of valid voltage level at the bootstrap pin.	2	-	-
t_4	XTAL startup time after internal POR down	-	1	-

1. *The timing value applies both to VDD33 and VDDIO for proper chip operation.*
2. *The bootstrap pin is BOOT.*

4.5 Shutdown sequence

Figure 6. Shutdown sequence

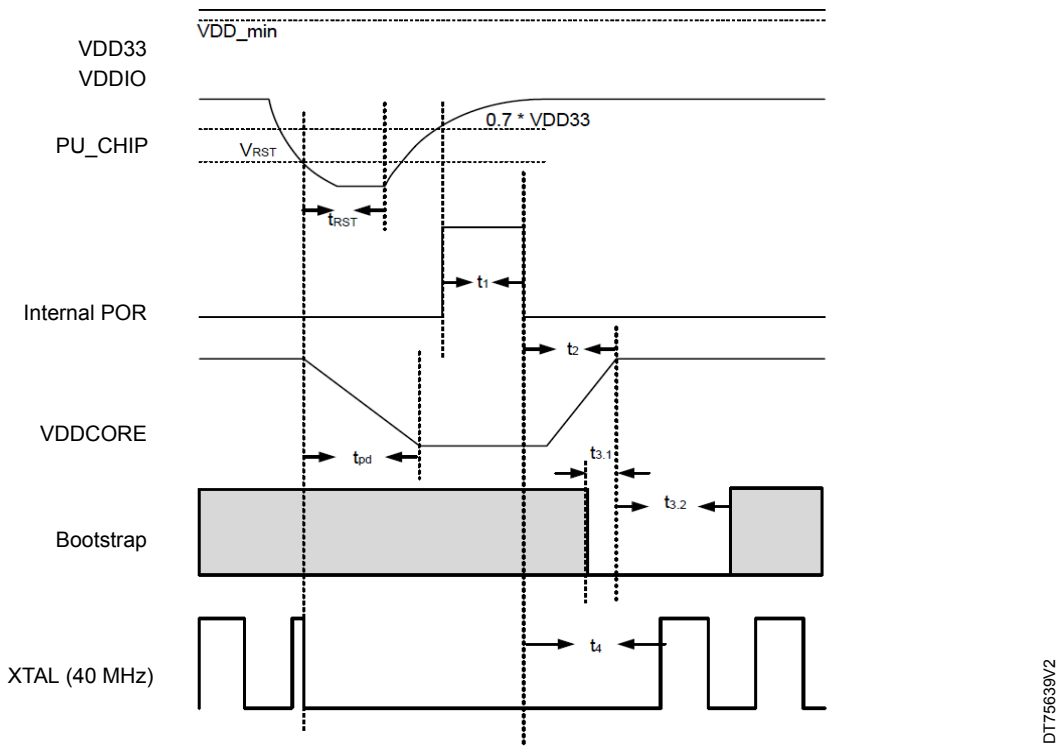

Table 7. Shutdown sequence parameters

Parameters	Description	Min.	Typ	Max.	Unit
V_{RST}	Shutdown occurs after PU_CHIP lower than this voltage	0	0.1 × VDD33	0.3 × VDD33	V
t_{RST}	The required time that PU_CHIP lower than VRST	1	1	-	ms
t_{pd}	Time for VDDCORE to decrease to 0 after shutdown	1	1	-	ms

4.6 DC power characteristics

Test conditions: V_{DDIO} = 3.3 V, temperature = 25 °C

Table 8. I/O DC characteristics

Symbol	Description	Min.	Typ	Max.	Unit
V_{OH}	Output voltage high	-	0.9 × VDDIO	-	V
V_{OL}	Output voltage low	-	0.1 × VDDIO	-	
V_{IH}	Input voltage high	0.7 × VDDIO	-	-	
V_{IL}	Input voltage low	-	-	0.3 × VDDIO	

4.7 WLAN RF characteristics

Table 9. 802.11b/g/n/ax radio performance

Standard	PHY	Modulation	MCS Index	Max Tx Power (dBm)[1]		Rx Sensitivity (dBm)	
				20 MHz	40 MHz	20 MHz	40 MHz
802.11b	CCK (DSSS)	DBPSK	–	21	–	-99	–
	CCK (DSSS)	DQPSK	–	21	–	-96	–
	CCK (DSSS)	B/DQPSK	–	21	–	-93.5	–
	CCK (DSSS)	Q/DQPSK	–	21	–	-90.5	–
802.11g	OFDM	BPSK	–	20	–	-93.5	–
	OFDM	BPSK	–	20	–	-93	–
	OFDM	QPSK	–	20	–	-92	–
	OFDM	QPSK	–	20	–	-89.5	–
	OFDM	16 QAM	–	20	–	-87	–
	OFDM	16 QAM	–	20	–	-83.5	–
	OFDM	64 QAM	–	18	–	-79	–
	OFDM	64 QAM	–	18	–	-78	–
802.11n	OFDM	BPSK	MCS0	19	18.5	-93	-90
	OFDM	QPSK	MCS1	19	18.5	-91	-88
	OFDM	QPSK	MCS2	19	18.5	-88.5	-85.5
	OFDM	16 QAM	MCS3	19	18.5	-86	-83.5
	OFDM	16 QAM	MCS4	19	18.5	-82.5	-79.5
	OFDM	64 QAM	MCS5	18.5	18	-78.5	-75.5
	OFDM	64 QAM	MCS6	18.5	18	-76.5	-74
	OFDM	64 QAM	MCS7	18	17	-75.5	-72.5
802.11ax	OFDMA	BPSK	MCS0	19	19	-93.5	-90.5
	OFDMA	QPSK	MCS1	19	19	-92.5	-89.5
	OFDMA	QPSK	MCS2	19	19	-90	-87.5
	OFDMA	16 QAM	MCS3	19	19	-87.5	-84.5
	OFDMA	16 QAM	MCS4	19	19	-84	-81.5
	OFDMA	64 QAM	MCS5	18.5	18	-80	-77
	OFDMA	64 QAM	MCS6	18	18	-79	-76
	OFDMA	64 QAM	MCS7	18	17	-78	-75
	OFDMA	256 QAM	MCS8	18	17	-73	-70.5
	OFDMA	256 QAM	MCS9	17	16	-72	-69.5

1. *The maximum power ratings reflect the transmitter's maximum power capability and is region-dependent. Refer to the specific certificate associated to the region for exact maximum output power.*

Table 10. Bluetooth LE performance

Standard	Topology	PHY	Modulation	Data Rate	Max Tx Power (dBm)	Rx Sensitivity (dBm)
BLE	P2P Broadcast Mesh	LE 2M	GFSK	2Mbps	+10	-97
		LE 1M	GFSK	1Mbps	+10	-99

Table 11. Synthesizer composite characteristics and transmit output power accuracy

Symbol	Parameter	Conditions	Min.	Typ	Max.	Unit
Synthesizer composite characteristics for 2.4 GHz						
F_c	Center channel frequency	Center frequency at 5 MHz spacing	2412	-	2484	MHz
F_{ref}	Reference oscillator frequency	±20 ppm	-	40	-	MHz
F_{step}	Frequency step size (at RF)	-	-	5	-	MHz
$T_{SPOWERUP}$	Time for power-up (from sleep)	-	-	-	50	us
Transmit output power accuracy						
APC[(1)]	Accuracy of transmit power control at 2.4 GHz at room temperature (3 sigma over top 10 dB of TPC range).	OLPC (Open Loop Power Control)	-	±1.5	-	dB

1. *All APC numbers assume conducted test with 50 Ω load.*

4.8 Power consumption

- **Active**: Continuous transmitting or receiving on connection to access point (AP).
- **DeepSleep**: Digital and analog parts are mostly powered off. RAM is in retention. This is the DTIM power-saving mode.
- **Shutdown**: The chip is supplied but in shut down.

The power consumption for each state is listed in the table below:

Table 12. Power consumption at 3.3 V, 25 °C

Operation mode	State	Typ	Unit	Comments
Static				
Power saving	DeepSleep	90	µA	Digital and analog parts are mostly powered off. RAM is in retention. This is the DTIM power-saving mode.
	Shutdown	0.2		-
DTIM				
DTIM	DTIM1	720	µA	Ext32k
		720		Xtal32k
		830		RC32k
	DTIM3	300		Ext32k
		300		Xtal32k
		390		RC32k
	DTIM5	240		Ext32k
		240		Xtal32k
		290		RC32k
	DTIM10	130		Ext32k
		130		Xtal32k
		180		RC32k

TWT current consumption

The measurements are done in TWT mode between the ST67W611M1 and a commercialized Wi-Fi 6 access point.

The following TWT current consumption measurements are done on an X-NUCLEO board which has an average current consumption of 90 µA when there is no activity (that is, in deepsleep during TWT doze state and while there is no `hcp_coarse_tmr` or probe request activity). Current consumption measurements are done after the initial phase of the probe requests. On STA side, TWT starts with several probe requests to gather AP timing data necessary for precise TWT wakeups.

Table 13. TWT current consumption

Mode	Average Current consumption SP = 32ms	Average Current consumption SP_{max} = 64ms	Unit
TWT 1 s	2786.2	4778.5	uA
TWT 10 s	363.4	552.5	uA
TWT 20 s	229.4	335.5	uA
TWT 30 s	183.8	218.5	uA
TWT 1 min	152.5	171	uA
TWT 5 min	111.5	115.5	uA
TWT 10 min	105.2	109.5	uA
TWT 20 min	103.8	104.8	uA
TWT 30 min	103.4	102.8	uA
TWT 1 h	103.4	102.7	uA

Table 14. Power consumption for continuous WLAN Tx 2.4 GHz at 3.3 V, 25 °C

Rate	Power (dBm)	Current consumption (mA)
11b 1 Mbps	22	372
11b 11 Mbps	22	377
11g 6 Mbps	21	352
11g 54 Mbps	19	304
MCS0 HT20	20	326
MCS7 HT20	19	311
MCS0 HT40	19	310
MCS7 HT40	18	292
MCS0 HE20	20	317
MCS9 HE20	18	285
MCS0 HE40	20	321
MCS9 HE40	16	262

Table 15. Power consumption for continuous WLAN Rx 2.4 GHz at 3.3 V, 25 °C

Rate	Current consumption (mA)
11b 1 Mbps	55
11b 11 Mbps	56
11g 6 Mbps	59
11g 54 Mbps	62
MCS0 HT20	59
MCS7 HT20	63

Rate	Current consumption (mA)
MCS0 HT40	71
MCS7 HT40	78
MCS0 HE20	60
MCS9 HE20	65
MCS0 HE40	74
MCS9 HE40	77

Table 16. Power consumption for Bluetooth® LE at 3.3 V, 25 °C

Description	Current consumption (mA)
Continuous Rx burst	53
Continuous Tx (+4 dBm)	107
Continuous Tx (+10 dBm)	167
1.28 sec page scan (non-interlaced)	0.75
1.28 sec LE ADV	0.32

5 Mechanical information

5.1 Device physical dimensions

5.1.1 ST67W611M1 LGA module PCB antenna (-B version)

Figure 7. **ST67W611M1 LGA module PCB antenna dimension**

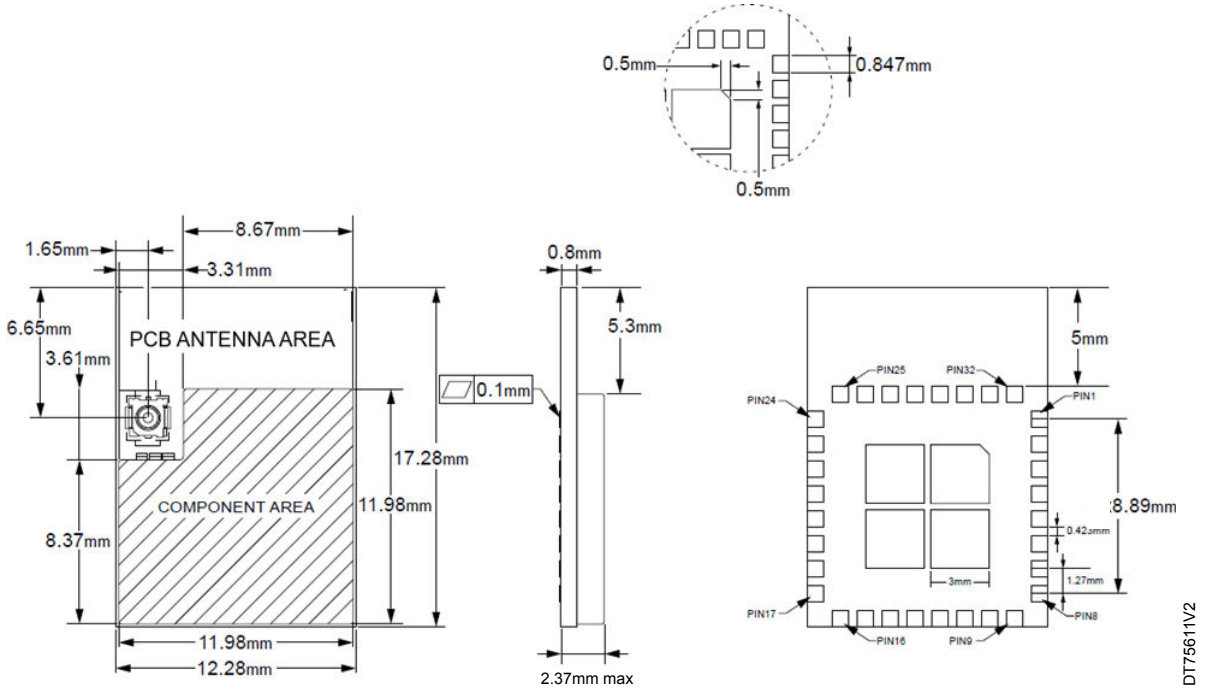

Figure 8. **ST67W611M1 LGA module PCB antenna landing pad**

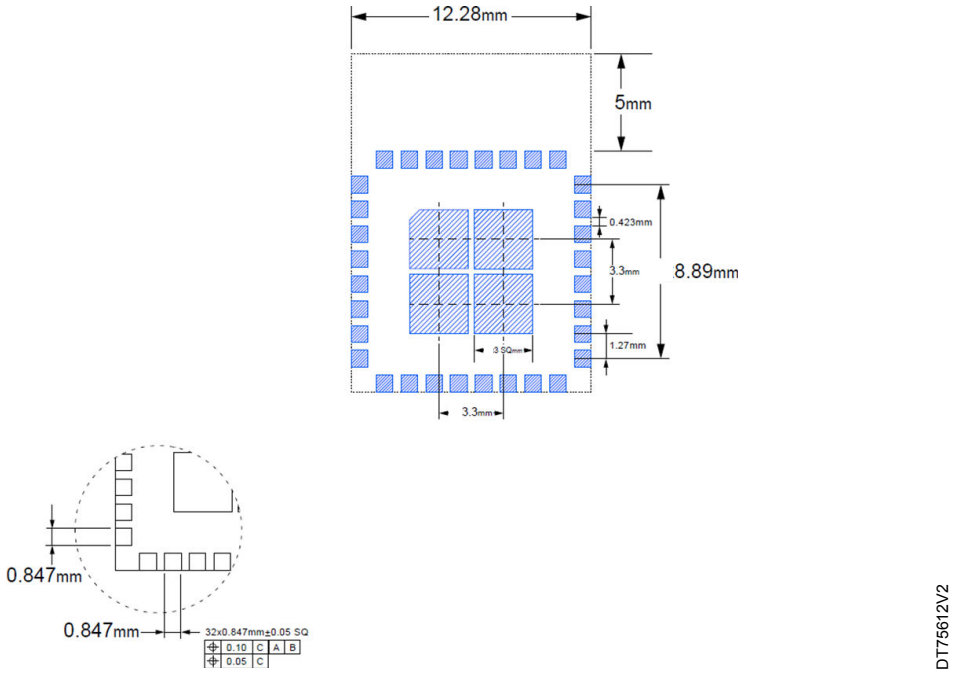

5.1.2 ST67W611M1 LGA module antenna connector (-U version)

Figure 9. ST67W611M1 LGA module antenna connector dimension

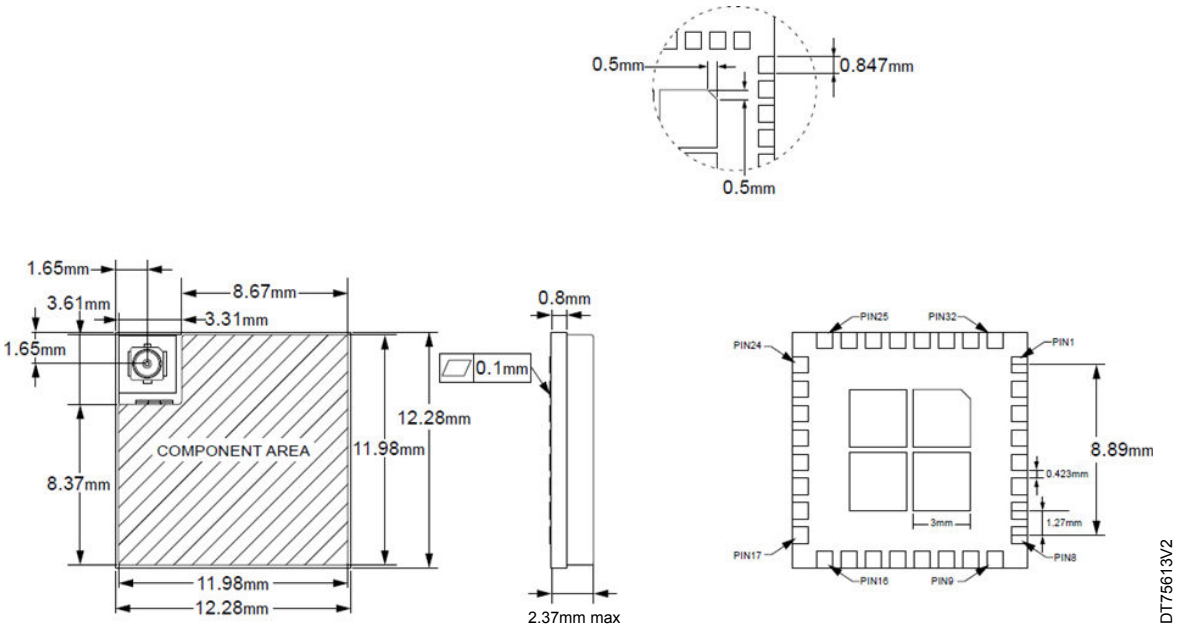

Figure 10. ST67W611M1 LGA module antenna connector landing pad

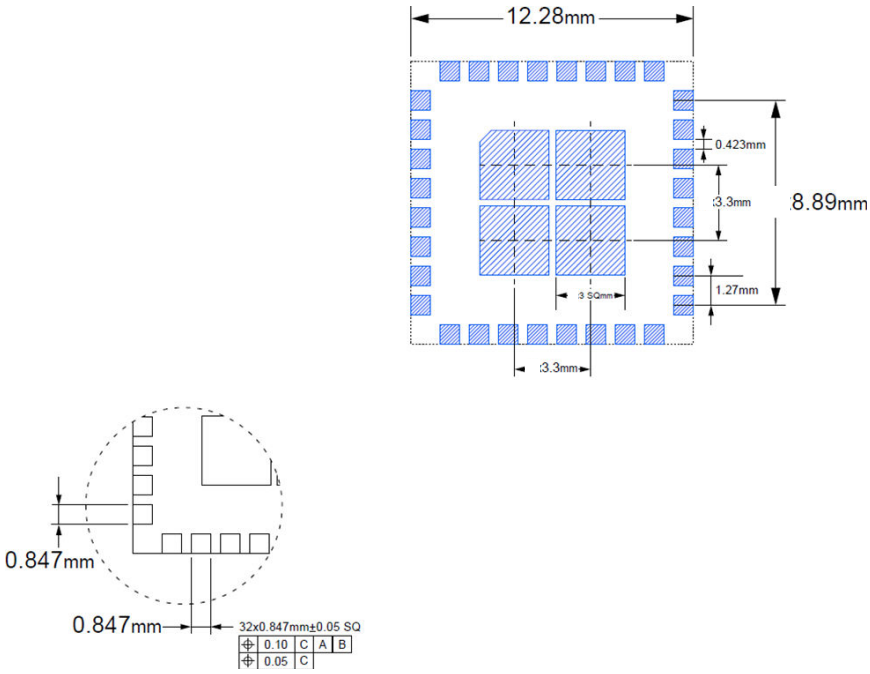

5.1.3 ST67W611M1 LGA module RF pin (-P version)

Figure 11. ST67W611M1 LGA module RF pin dimension

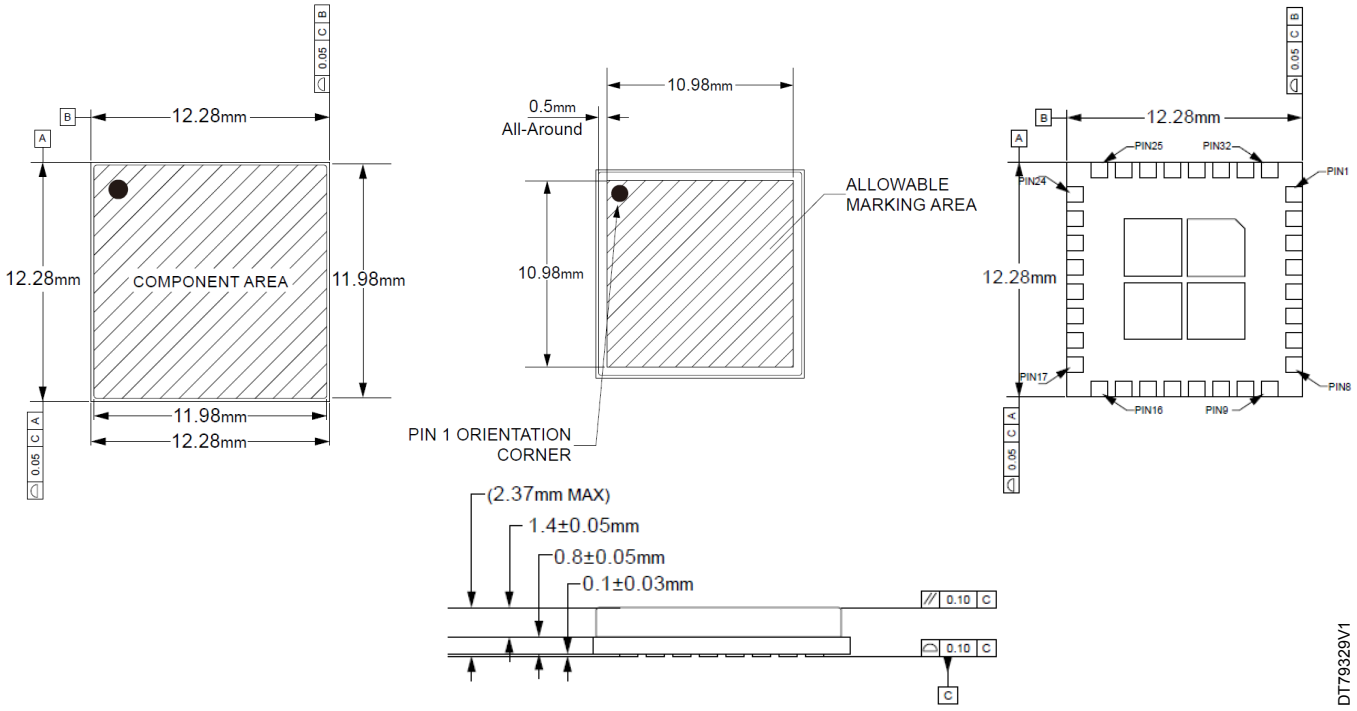

Figure 12. ST67W611M1 LGA module RF pin landing pad

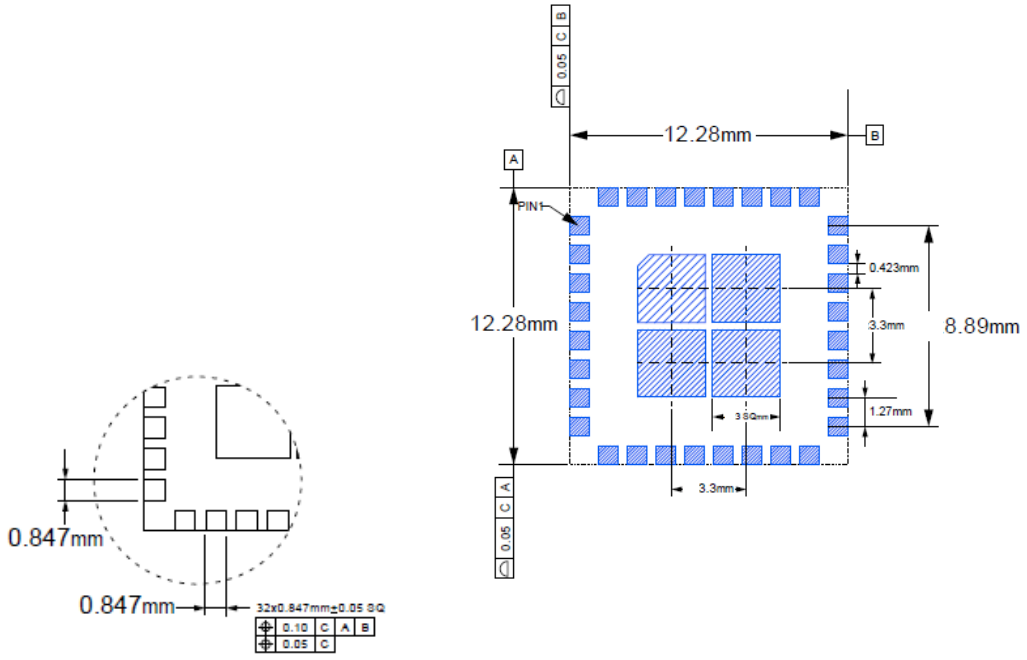

5.1.4 Part marking

5.1.4.1 ST67W611M1A6B part marking

Figure 13. ST67W611M1A6B part marking

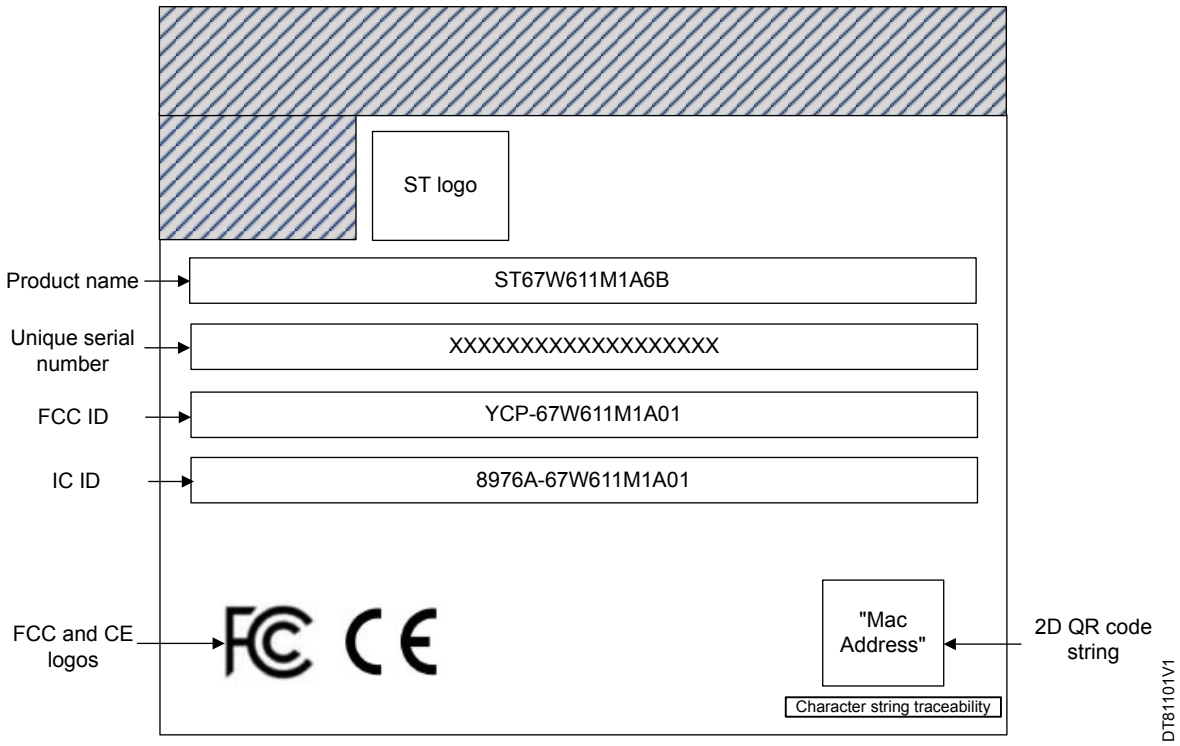

5.1.4.2 ST67W611M1A6U part marking

Figure 14. ST67W611M1A6U part marking

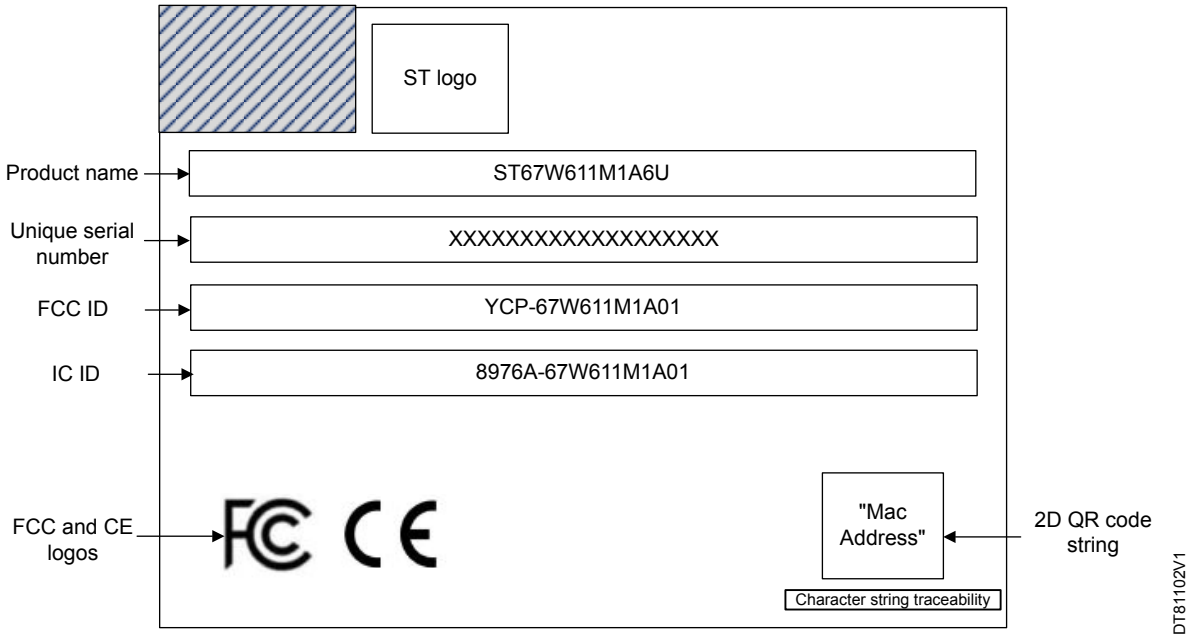

5.1.4.3 ST67W611M1A6P part marking

Figure 15. **ST67W611M1A6P part marking**

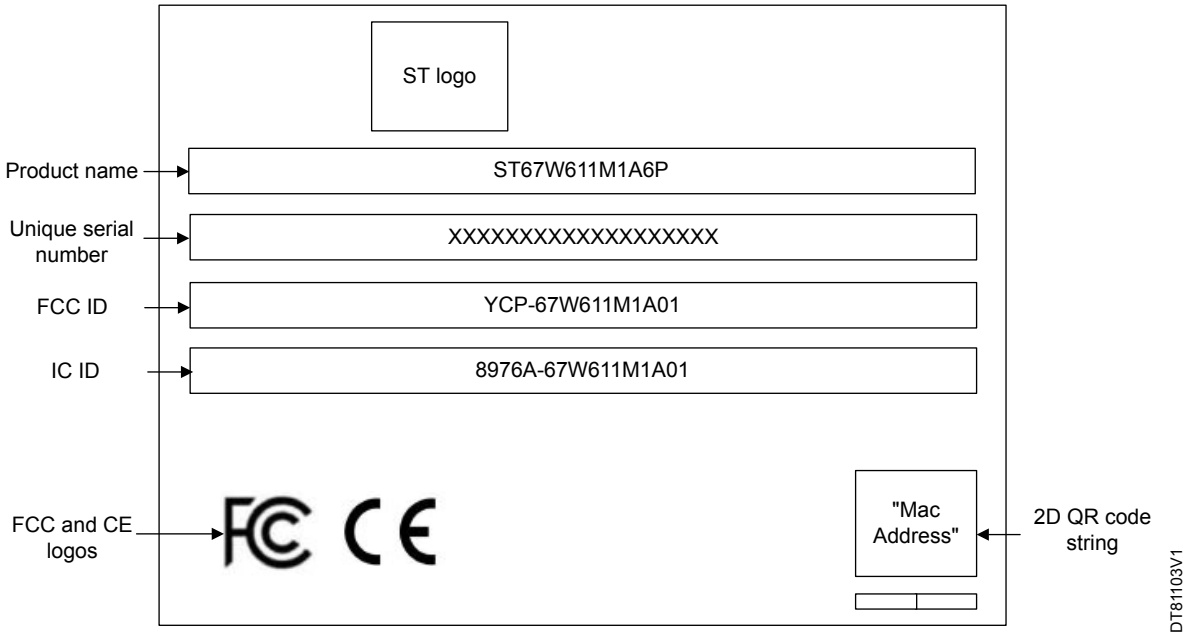

6 Manufacturing guidelines

6.1 Power layout guideline

The ST67W611M1 can be powered by either a battery or a DC 3.3 V power supply. To ensure proper operation, follow these guidelines for power pin connections and decoupling:

1. Place the capacitor as close as possible to the chip and the power pin.
2. Use a capacitor to decouple the power supply from the chip.
3. Use capacitors to prevent noise from coupling back to the power plane.

Figure 16. Power layout guideline

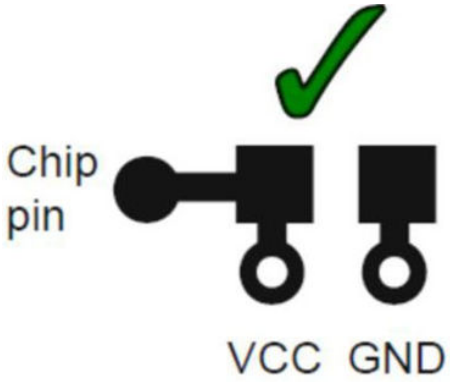

DT75615V1

6.2 RF layout guideline

To optimize antenna performance, follow these guidelines for placing ST67W611M1 on the PCB:

1. Place ST67W611M1 in the corner of the PCB as shown in Figure 17.
2. Do not cover the antenna clearance area with copper or traces.
3. Keep the antenna area as far away as possible from the power supply and metal components.
4. Connect all GND pins directly to a solid GND plane.
5. Place GND vias as close as possible to the GND pin.
6. Use a good layout method to avoid excessive noise coupling with signal lines or supply voltage lines.

Figure 17. RF layout guideline

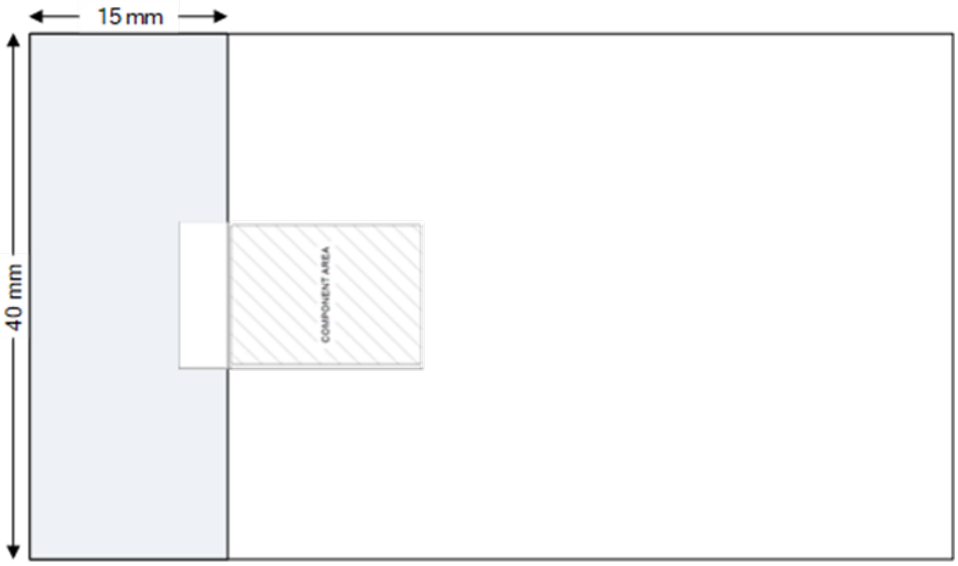

DT75616V1

6.3 Soldering guideline

ST67W611M1 can be SMT on the board following the temperature curve graph.

Figure 18. Soldering guideline

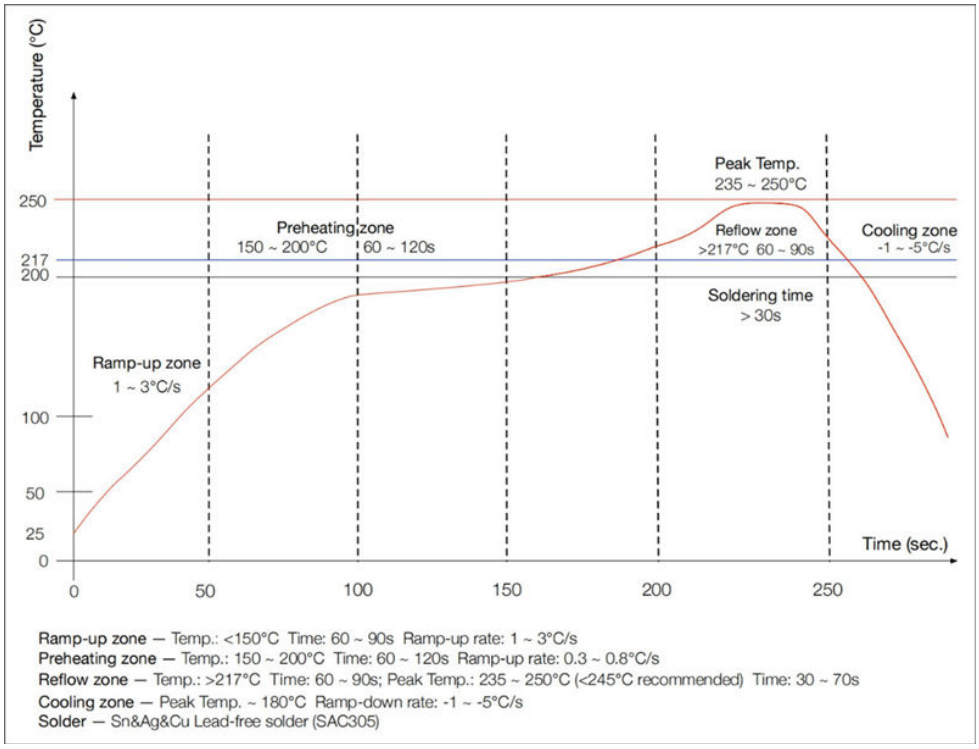

DT75617V1

7 Tape and reel information

All tape carrier systems conform to EIA-481 standards.

The following figure shows the simplified sketch of the ST67W611M1 tape carrier including the part orientation, maximum number of devices per reel, and key dimensions

Figure 19. Carrier tape drawing with part orientation

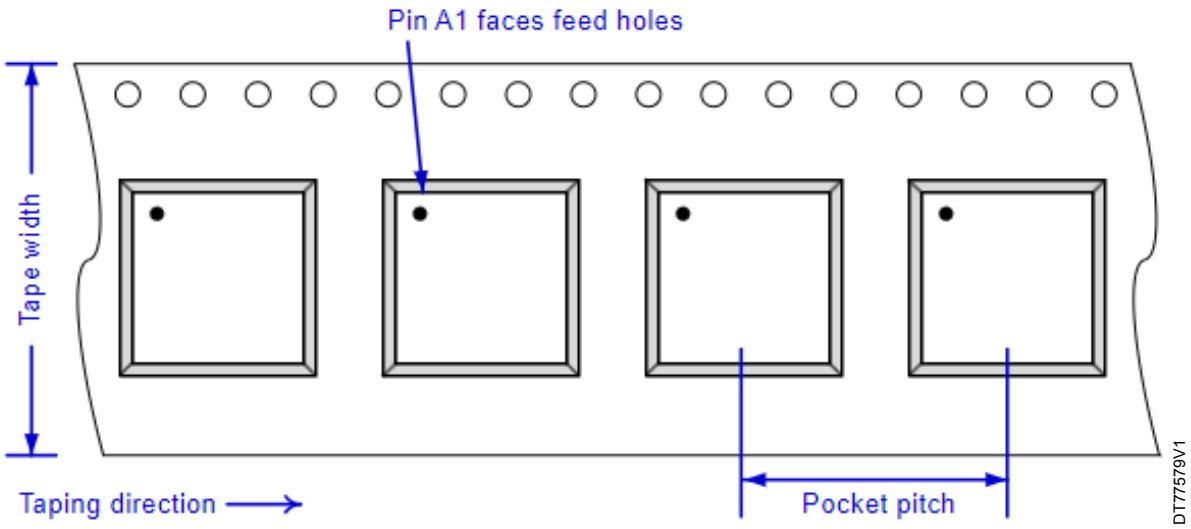

Table 17. ST67W611M1A6B

Tape feed: Single	Reel diameter: 330 mm	Tape width: 32 mm
Units per reel: 800	Hub diameter: 178 mm	Pocket pitch: 20 mm

Table 18. ST67W611M1A6U / ST67W611M1A6P

Tape feed: Single	Reel diameter: 330 mm	Tape width: 24 mm
Units per reel: 800	Hub diameter: 178 mm	Pocket pitch: 20 mm

The following figure shows the tape-handling recommendation.

Figure 20. Tape handling

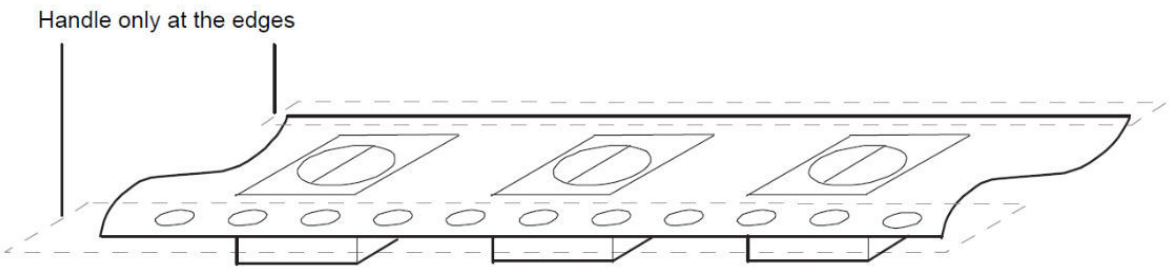

8 Device moisture sensitivity level

A package's moisture sensitivity level (MSL) indicates its ability to withstand exposure after it is removed from its shipment bag, while it is on the factory floor awaiting PCB installation. A low MSL rating is better than a high rating; a low MSL device can be exposed on the factory floor longer than a high MSL device. All pertinent MSL ratings are summarized in Table 19.

Table 19. MSL ratings summary

MSL	Out-of-bag floor life	Comments
1	Unlimited	≤ 30°C/85% RH
2	1 year	≤ 30°C/60% RH
2a	4 weeks	≤ 30°C/60% RH
3	168 hours	≤ 30°C/60% RH; ST67W611M1
4	72 hours	≤ 30°C/60% RH
5	48 hours	≤ 30°C/60% RH
5a	24 hours	≤ 30°C/60% RH
6	Mandatory bake before use. After baking, it must be reflowed within the time limit specified on the label.	≤ 30°C/60% RH

ST follows the latest IPC/JEDEC J-STD-020 standard revision for moisture-sensitivity qualification. The ST67W611M1 devices are targeted as MSL3.

9 Bagged storage conditions

ST67W611M1 devices delivered in tape and reel carriers must be stored in sealed, moisture barrier, antistatic bags.

10 Handling

Tape handling is described in Tape and reel information. For other (IC-specific) handling guidelines, see the following topics.

10.1 Baking

It is not necessary to bake the ST67W611M1 if the conditions specified in Bagged storage conditions and Out-of-bag duration have not **been exceeded**.

It is necessary to bake the ST67W611M1 if any condition specified in Bagged storage conditions or Out-of-bag duration has **been exceeded**. The baking conditions are specified on the moisture-sensitive caution label attached to each bag.

Caution: *If baking is required, the devices must be transferred into trays that can be baked to at least 125°C. Do not bake devices in tape and reel carriers at any temperature.*

10.2 Electrostatic discharge

Electrostatic discharge (ESD) occurs naturally in laboratory and factory environments. An established high-voltage potential is always at risk of discharging to a lower potential. If this discharge path is through a semiconductor device, destructive damage may result. ESD countermeasures and handling methods must be developed and used to control the factory environment at each manufacturing site.

11 Ordering information

Example:	ST67	W	6	1	1	M	1	A	6	B/P/U	TR

Device family

ST67 = ST RF connectivity product

Product type

W = Wi-Fi

Device subfamily

6 = Wi-Fi 6 version

Flash memory size

1 = Side-by-side flash

Data interface

1 = SPI

Component type

M = Module

Hardware feature set

1 = Without 32 kHz Xtal

Package

A = PCB version A

Temperature range

6 = Industrial temperature range,

– 40 °C to 85 °C

Options

B = PCB antenna

P = Pinned

U = MHF4 antenna connector

Packing

TR = Tape and reel

12 FCC- ISED compliance statement

FCC Part 15 compliance statement

Changes or modifications not expressly approved by STMicroelectronics could void the user's authority to operate the equipment.

This device complies with part 15 of the FCC Rules. Operation is subject to the following two conditions: (1) This device may not cause harmful interference, and (2) this device must accept any interference received, including interference that may cause undesired operation.

FCCID: YCP-67W611M1A01

Product Marketing Name: ST67W611M1A

Models Name: ST67W611M1A

- Applicable FCC rules: Thismodule has been approved under FCC part 15C 15.247 in the frequency range 2400-2483.5MHz. This modular transmitter is only FCC authorized for this specific rule part.
- Specific operational use conditions:
  - The module is limited to OEM installation ONLY.
  - Only the module grantee is permitted to make permissive changes.
  - The OEM integrator is responsible for ensuring that the end-user has no manual instruction to remove or install module.
- Limited module procedures are not applicable to this application.
- Trace antenna: Not applicable
- Radio Frequency (RF) Exposure Compliance of Radio communication: To satisfy FCC RF Exposure requirements, a separation distance of 20cm or more should be maintained between the antenna of this device and persons during operation. To ensure compliance, operation at a closer distance than this is not recommended. This transmitter must not be co- located or operating in conjunction with any other antenna or transmitter.
- List of antenna type approved for ST67W611M1A6U & ST67W611M1A6P:
  - External PIFA, max antenna gain: 3.19dBi
  - External dipole, max antenna gain: 3.37dBi
  - External monopole, max antenna gain: 3.12dBi
    If other antenna with higher gain or other antennas type, other than the type documented in the filing, a class 2 permissive change must be filed with FCC
- End Product Labeling: The final end product must be labeled in a visible area with the following: *"Contains Transmitter Module FCC ID: YCP-67W611M1A01"*
- End Product User's Manual: The user manual for end users must include the following information in a prominent location: *To satisfy FCC RF Exposure requirements, a separation distance of 20cm or more should be maintained between the antenna of this device and persons during operation. To ensure compliance, operation at a closer distance than this is not recommended. This transmitter must not be co-located or operating in conjunction with any other antenna or transmitter.*
- Additional testing requirements:
  If testing of the host product with this transmitter installed and operating is necessary (to verify that the host product meets all the applicable FCC rules), a test mode for this specific module is available upon request to STMicroelectronics.
- The host product manufacturer is responsible for compliance to any other FCC rules that apply to the host not covered by the modular transmitter grant of certification. (For example, Part 15 Subpart B)

ISED- Industry Canada Licence-Exempt Radio Apparatus

IC: 8976A-67W611M1A01

Product Marketing Name: ST67W611M1A

HVIN: ST67W611M1A6B & ST67W611M1A6U & ST67W611M1A6P

Note: ST67W611M1A6B & ST67W611M1A6U & ST67W611M1A6P models share this same user's manual because these two models belong to the same hardware family of the ST67W611M1A module.

This device contains licence-exempt transmitter(s)/receivers(s) that comply with Innovation, Science and EconomicDevelopment Canda's licence-exempt RSS(s). Operation is subject to the following two conditions:

1. This device may not cause interference
2. This device must accept any interference, including interference that may cause undesired operation of the device.

- Applicable ISED-CANADA rules: Thismodule has been approved under RSS-247 in the frequency range 2400-2483.5MHz. This modular transmitter is only ISED authorized for this specific rule part.
- Specific operational use conditions:
  - The module is limited to OEM installation ONLY.
  - Only the module grantee is permitted to make permissive changes.
  - The OEM integrator is responsible for ensuring that the end-user has no manual instruction to remove or install module.
- Limited module procedures are not applicable to this application.
- Trace antenna: Not applicable.
- Radio Frequency (RF) Exposure Compliance of Radio communication: To satisfy ISED-Canada RF Exposure requirements, a separation distance of 20cm or more should be maintained between the antenna of this device and persons during operation. To ensure compliance, operation at a closer distance than this is not recommended. This transmitter must not be co- located or operating in conjunction with any other antenna or transmitter.
- This radio transmitter IC: 8976A-67W611M1A01 has been approved by Innovation, Science and Economic Development Canada to operate with the antenna types listed below, with the maximum permissible gain indicated. Antenna types not included in this list that have a gain greater than the maximum gain indicated for any type listed are strictly prohibited for use with this device.
  List of antenna type approved for ST67W611M1A6U & ST67W611M1A6P:
  - External PIFA, max antenna gain: 3.19dBi
  - External dipole, max antenna gain: 3.37dBi
  - External monopole, max antenna gain: 3.12dBi

  If other antenna with higher gain or other antennas type, other than the type documented in the filing, a class 2 permissive change must be filed with ISED-Canada.
- End Product Labeling: The final end product must be labeled in a visible area with the following: *Contains Transmitter Module IC: 8976A-67W611M1A01"*
- End Product User's Manual: The user manual for end users must include the following information in a prominent location: *To satisfy ISED-Canada RF Exposure requirements, a separation distance of 20cm or more should be maintained between the antenna of this device and persons during operation. To ensure compliance, operation at a closer distance than this is not recommended. This transmitter must not be co-located or operating in conjunction with any other antenna or transmitter*.
- Additional testing requirements:
  If testing of the host product with this transmitter installed and operating is necessary (to verify that the host product meets all the applicable ISED-Canada rules), a test mode for this specific module is available upon request to STMicroelectronics.
- The host product manufacturer is responsible for compliance to any other ISED-Canada rules that apply to the host not covered by the modular transmitter grant of certification. (For example, ICES-003)

ISED- Industry Canada Licence-Exempt Radio Apparatus

IC: 8976A-67W611M1A01

Nom de marque du produit: ST67W611M1A

NIVM: ST67W611M1A6B & ST67W611M1A6U & ST67W611M1A6P

Remarque : les modèles ST67W611M1A6B & ST67W611M1A6U & ST67W611M1A6P partagent ce même manuel d'utilisation car ces deux modèles appartiennent à la même famille matérielle du module ST67W611M1A.

L'émetteur/récepteur exempt de licence contenu dans le présent appareil est conforme aux CNR d'Innovation, Sciences et Développement économique Canada applicables aux appareils radio exempts de licence. L'exploitation est autorisée aux deux conditions suivantes :

1. L'appareil ne doit pas produire de brouillage;
2. L'appareil doit accepter tout brouillage radioélectrique subi, même si le brouillage est susceptible d'en compromettre le fonctionnement.

- Règles ISED-CANADA applicables : Ce module a été approuvé suivant la norme RSS-247 dans la gamme de fréquences 2400-2483.5MHz. Cet émetteur modulaire est uniquement autorisé par ISDE pour cette partie de règle spécifique.
- Conditions opérationnelles spécifiques d'utilisation :
  - Le module est limité à l'installation OEM uniquement.
  - Seul le titulaire de la certification du module est autorisé à apporter des modifications permissives.
  - L'intégrateur OEM est responsable de s'assurer que l'utilisateur final ne dispose d'aucune instruction pour retirer ou installer le module.
- Les procédures de module limité ne sont pas applicables à cette application.
- Conception de la piste d'antenne : Non applicable
- Conformité des communications radio en matière d'exposition aux radiofréquences (RF) : Pour satisfaire aux exigences d'ISDE-Canada en matière d'exposition aux radiofréquences, une distance de séparation de 20 cm ou plus doit être maintenue entre l'antenne de cet appareil et les personnes pendant le fonctionnement. Pour assurer la conformité, il est déconseillé d'utiliser cet équipement à une distance inférieure. Cet émetteur ne doit pas être co-situé ou fonctionner conjointement avec une autre antenne ou un autre émetteur.
- Cet émetteur radio 8976A-67W611M1A01 a été approuvé par Innovation, Sciences et Développement Economique Canada pour fonctionner avec les types d'antennes énumérés ci-dessous, avec le gain maximal autorisé indiqué. Les types d'antennes non inclus dans cette liste, ou qui ont un gain supérieur au gain maximal indiqué pour tout type répertorié sont strictement interdits pour une utilisation avec cet appareil.
  Liste des types d'antennes approuvés :
  - Antenna PIFA, gain maximal : 3.19dBi
  - Antenne dipole, gain maximal : 3.37dBi
  - Antenna monopole, gain maximal : 3.12dBi

  Si d'autres antennes avec un gain plus élevé ou d'un autre type d'antenne, autre que le type documenté dans le dossier, un changement permissif de classe 2 doit être déposé auprès d'ISDE-Canada.
- Étiquetage du produit final : Le produit final doit être étiqueté dans une zone visible avec les éléments suivants : « Contient IC : 8976A-67W611M1A01 »
- Manuel de l'utilisateur du produit final : le manuel de l'utilisateur destiné aux utilisateurs finaux doit inclure les informations suivantes dans un endroit bien en vue :
  Pour satisfaire aux exigences d'ISDE-Canada en matière d'exposition aux RF, une distance de séparation de 20 cm ou plus doit être maintenue entre l'antenne de cet appareil et les personnes pendant le fonctionnement. Pour garantir la conformité, il n'est pas recommandé d'opérer à une distance plus courte que celle-ci. Cet émetteur ne doit pas être colocalisé ou fonctionner en conjonction avec une autre antenne ou émetteur.
- Exigences de tests supplémentaires :
  Si un test du produit hôte avec cet émetteur installé et opérationnel est nécessaire (pour vérifier que le produit hôte répond à toutes les règles applicables d'ISDE-Canada), un mode de test pour ce module spécifique est disponible sur demande à STMicroelectronics.
- Le fabricant du produit hôte est responsable du respect de toutes les autres règles ISDE applicables à l'hôte non couvertes par l'octroi de certification de l'émetteur modulaire. (Par exemple, ICES-003)

13 RED Compliance Statement

Déclaration de conformité CE simplifiée

STMicroelectronics déclare que l'équipement radioélectrique du type "ST67W611M1A6B & ST67W611M1A6U & ST67W611M1A6P" est conforme à la directive 2014/53/UE.

Bande de fréquence utilisée en transmission et puissance maximale rayonnée dans cette bande :

- Bande de fréquence : 2400-2483.5 MHz
- Puissance maximale : 100mW p.i.r.e

Simplified EC compliance statement

Hereby, STMicroelectronics declares that the radio equipment type "ST67W611M1A6B & ST67W611M1A6U & ST67W611M1A6P " is in compliance with Directive 2014/53/EU.

Frequency range used in transmission and maximal radiated power in this range:

- Frequency range: 2400-2483.5 MHz (Bluetooth®)
- Maximal power: 100mW e.i.r.p

14 NCC Compliance Statement

取得審驗證明之低功率射頻器材，非經核准，公司、商號或使用者均不得擅自變更頻率、加大功率或變更原設計之特性及功能。

低功率射頻器材之使用不得影響飛航安全及干擾合法通信；經發現有干擾現象時，應立即停用，並改善至無干擾時方得繼續使用。

前述合法通信，指依電信管理法規定作業之無線電通信。

低功率射頻器材須忍受合法通信或工業、科學及醫療用電波輻射性電機設備之干擾。

Important security notice

The STMicroelectronics group of companies (ST) places a high value on product security, which is why the ST product(s) identified in this documentation may be certified by various security certification bodies and/or may implement our own security measures as set forth herein. However, no level of security certification and/or built-in security measures can guarantee that ST products are resistant to all forms of attacks. As such, it is the responsibility of each of ST's customers to determine if the level of security provided in an ST product meets the customer needs both in relation to the ST product alone, as well as when combined with other components and/or software for the customer end product or application. In particular, take note that:

- ST products may have been certified by one or more security certification bodies, such as Platform Security Architecture (www.psacertified.org) and/or Security Evaluation standard for IoT Platforms (www.trustcb.com). For details concerning whether the ST product(s) referenced herein have received security certification along with the level and current status of such certification, either visit the relevant certification standards website or go to the relevant product page on www.st.com for the most up to date information. As the status and/or level of security certification for an ST product can change from time to time, customers should re-check security certification status/level as needed. If an ST product is not shown to be certified under a particular security standard, customers should not assume it is certified.
- Certification bodies have the right to evaluate, grant and revoke security certification in relation to ST products. These certification bodies are therefore independently responsible for granting or revoking security certification for an ST product, and ST does not take any responsibility for mistakes, evaluations, assessments, testing, or other activity carried out by the certification body with respect to any ST product.
- Industry-based cryptographic algorithms (such as AES, DES, or MD5) and other open standard technologies which may be used in conjunction with an ST product are based on standards which were not developed by ST. ST does not take responsibility for any flaws in such cryptographic algorithms or open technologies or for any methods which have been or may be developed to bypass, decrypt or crack such algorithms or technologies.
- While robust security testing may be done, no level of certification can absolutely guarantee protections against all attacks, including, for example, against advanced attacks which have not been tested for, against new or unidentified forms of attack, or against any form of attack when using an ST product outside of its specification or intended use, or in conjunction with other components or software which are used by customer to create their end product or application. ST is not responsible for resistance against such attacks. As such, regardless of the incorporated security features and/or any information or support that may be provided by ST, each customer is solely responsible for determining if the level of attacks tested for meets their needs, both in relation to the ST product alone and when incorporated into a customer end product or application.
- All security features of ST products (inclusive of any hardware, software, documentation, and the like), including but not limited to any enhanced security features added by ST, are provided on an "AS IS" BASIS. AS SUCH, TO THE EXTENT PERMITTED BY APPLICABLE LAW, ST DISCLAIMS ALL WARRANTIES, EXPRESS OR IMPLIED, INCLUDING BUT NOT LIMITED TO THE IMPLIED WARRANTIES OF MERCHANTABILITY OR FITNESS FOR A PARTICULAR PURPOSE, unless the applicable written and signed contract terms specifically provide otherwise.

Revision history

Table 20. Document revision history

Date	Revision	Changes
19-Mar-2025	1	Initial release.
03-Jun-2025	2	First public release. Updated: • Cover page and product status table • Section Features • Section 2: Description • Section 1: Introduction • Section 3.1: Pinout schematics • Section 3.2: Pin description • Section 4.4: Power-on sequence • Section 4.5: Shutdown sequence • Section 4.7: WLAN RF characteristics • Section 4.8: Power consumption • Section 5.1.1: ST67W611M1 LGA module PCB antenna (-B version) • Section 5.1.2: ST67W611M1 LGA module antenna connector (-U version) • Section 6.1: Power layout guideline Added Section 2.1: UART interface and Section 2.2: SPI interface. Removed "Bluetooth® LE RF performance" section.
16-Jun-2025	3	Updated Section Features and Section 2: Description. Added: • Section 4.2: Electrical sensitivity characteristics • Section 7: Tape and reel information • Section 8: Device moisture sensitivity level • Section 9: Bagged storage conditions • Section 10: Handling • Section 10.1: Baking • Section 10.2: Electrostatic discharge
10-Sep-2025	4	Updated: • Section Features • Figure 1. ST67W611M1 block diagram • Section 3.1: Pinout schematics • Section 3.2: Pin description • Section 4.1: Absolute maximum ratings • Section 4.2: Electrical sensitivity characteristics • Section 4.3: Operating conditions • Section 4.4: Power-on sequence • Section 4.7: WLAN RF characteristics • Section 11: Ordering information • Section 12: FCC- ISED compliance statement and Section 13: RED Compliance Statement to add ST67W611M1A6P Added Section 5.1.3: ST67W611M1 LGA module RF pin (-P version) and Section 14: NCC Compliance Statement.
04-May-2026	5	Updated: • Section 1: Introduction • Section 2.2: SPI interface • Section 3.2: Pin description • Section 4.2: Electrical sensitivity characteristics • Section 4.7: WLAN RF characteristics • Section 11: Ordering information Added Section 5.1.4: Part marking
14-Oct-2026	6	Updated:

Date	Revision	Changes
		• Section 1: Introduction • Section 3.2: Pin description • Section 11: Ordering information Added Anatel logo in the cover page.

Contents

1 Introduction . . . 3
2 Description . . . 4
2.1 UART interface . . . 4
2.2 SPI interface . . . 5
3 Pinouts and pin description . . . 6
3.1 Pinout schematics . . . 6
3.2 Pin description . . . 8
4 Electrical characteristics . . . 9
4.1 Absolute maximum ratings . . . 9
4.2 Electrical sensitivity characteristics . . . 9
4.3 Operating conditions . . . 9
4.4 Power-on sequence . . . 10
4.5 Shutdown sequence . . . 11
4.6 DC power characteristics . . . 11
4.7 WLAN RF characteristics . . . 12
4.8 Power consumption . . . 13
5 Mechanical information . . . 16
5.1 Device physical dimensions . . . 16
5.1.1 ST67W611M1 LGA module PCB antenna (-B version) . . . 16
5.1.2 ST67W611M1 LGA module antenna connector (-U version) . . . 17
5.1.3 ST67W611M1 LGA module RF pin (-P version) . . . 18
5.1.4 Part marking . . . 19
6 Manufacturing guidelines . . . 21
6.1 Power layout guideline . . . 21
6.2 RF layout guideline . . . 21
6.3 Soldering guideline . . . 22
7 Tape and reel information . . . 23
8 Device moisture sensitivity level . . . 24
9 Bagged storage conditions . . . 25
10 Handling . . . 26
10.1 Baking . . . 26
10.2 Electrostatic discharge . . . 26
11 Ordering information . . . 27
12 FCC- ISED compliance statement . . . 28

13 RED Compliance Statement 31
14 NCC Compliance Statement 32
Important security notice 33
Revision history 34
List of tables 38
List of figures 39

List of tables

Table 1. ST67W611M1 pin definition . . . 8
Table 2. Absolute maximum ratings . . . 9
Table 3. Electrical sensitivity characteristics . . . 9
Table 4. Recommended power operating range . . . 9
Table 5. Recommended temperature operating range . . . 9
Table 6. Power-on sequence parameters . . . 10
Table 7. Shutdown sequence parameters . . . 11
Table 8. I/O DC characteristics . . . 11
Table 9. 802.11b/g/n/ax radio performance . . . 12
Table 10. Bluetooth LE performance . . . 12
Table 11. Synthesizer composite characteristics and transmit output power accuracy . . . 13
Table 12. Power consumption at 3.3 V, 25 °C . . . 13
Table 13. TWT current consumption . . . 14
Table 14. Power consumption for continuous WLAN Tx 2.4 GHz at 3.3 V, 25 °C . . . 14
Table 15. Power consumption for continuous WLAN Rx 2.4 GHz at 3.3 V, 25 °C . . . 14
Table 16. Power consumption for Bluetooth® LE at 3.3 V, 25 °C . . . 15
Table 17. ST67W611M1A6B . . . 23
Table 18. ST67W611M1A6U / ST67W611M1A6P . . . 23
Table 19. MSL ratings summary . . . 24
Table 20. Document revision history . . . 34

List of figures

Figure 1. ST67W611M1 block diagram . . . 4
Figure 2. ST67W611M1A6B LGA module PCB antenna . . . 6
Figure 3. ST67W611M1A6U LGA module antenna connector. . . . 6
Figure 4. ST67W611M1A6P LGA module pin connector . . . 7
Figure 5. Power-on sequence . . . 10
Figure 6. Shutdown sequence . . . 11
Figure 7. ST67W611M1 LGA module PCB antenna dimension. . . . 16
Figure 8. ST67W611M1 LGA module PCB antenna landing pad. . . . 16
Figure 9. ST67W611M1 LGA module antenna connector dimension . . . 17
Figure 10. ST67W611M1 LGA module antenna connector landing pad . . . 17
Figure 11. ST67W611M1 LGA module RF pin dimension . . . 18
Figure 12. ST67W611M1 LGA module RF pin landing pad . . . 18
Figure 13. ST67W611M1A6B part marking . . . 19
Figure 14. ST67W611M1A6U part marking . . . 19
Figure 15. ST67W611M1A6P part marking . . . 20
Figure 16. Power layout guideline. . . . 21
Figure 17. RF layout guideline . . . 21
Figure 18. Soldering guideline . . . 22
Figure 19. Carrier tape drawing with part orientation . . . 23
Figure 20. Tape handling. . . . 23

IMPORTANT NOTICE – READ CAREFULLY

STMicroelectronics NV and its subsidiaries (“ST”) reserve the right to make changes, corrections, enhancements, modifications, and improvements to ST products and/or to this document at any time without notice.

In the event of any conflict between the provisions of this document and the provisions of any contractual arrangement in force between the purchasers and ST, the provisions of such contractual arrangement shall prevail.

The purchasers should obtain the latest relevant information on ST products before placing orders. ST products are sold pursuant to ST’s terms and conditions of sale in place at the time of order acknowledgment.

The purchasers are solely responsible for the choice, selection, and use of ST products and ST assumes no liability for application assistance or the design of the purchasers’ products.

No license, express or implied, to any intellectual property right is granted by ST herein.

Resale of ST products with provisions different from the information set forth herein shall void any warranty granted by ST for such product.

If the purchasers identify an ST product that meets their functional and performance requirements but that is not designated for the purchasers' market segment, the purchasers shall contact ST for more information.

ST and the ST logo are trademarks of ST. For additional information about ST trademarks, refer to www.st.com/trademarks. All other product or service names are the property of their respective owners.

Information in this document supersedes and replaces information previously supplied in any prior versions of this document.

© 2026 STMicroelectronics – All rights reserved